FINAL REPORT
NOVEMBER 1991

REPORT NO. EVT 33-90-3

SAUDI ARABIA (SA) AMMUNITION TEMPERATURES IN OPEN STORAGE, 1991

Prepared for:
U.S. Army Armament Research,
Development and Engineering Center
ATTN: SMCAR-QAN-P (D)
Picatinny Arsenal, NJ 07806-5000

Distribution Unlimited

U.S. ARMY
ARMAMENT
MUNITIONS
CHEMICAL COMMAND

U.S. ARMY DEFENSE AMMUNITION
CENTER AND SCHOOL

VALIDATION ENGINEERING DIVISION
SAVANNA, ILLINOIS 61074-9639

AVAILABILITY NOTICE

A copy of this report will be furnished each attendee on automatic distribution. Additional copies or authority for reprinting may be obtained by written request from Director, U.S. Army Defense Ammunition Center and School, ATTN: SMCAC-DEV, Savanna, IL 61074-9639.

DISTRIBUTION INSTRUCTIONS

Destroy this report when no longer needed. Do not return.

***

Citation of trade names in this report does not constitute an official endorsement.

***

The information contained herein will not be used for advertising purposes.

UNCLASSIFIED
SECURITY CLASSIFICATION OF THIS PAGE

REPORT DOCUMENTATION PAGE

Form Approved
OMB No. 0704-0188

1a. REPORT SECURITY CLASSIFICATION UNCLASSIFIED	1b. RESTRICTIVE MARKINGS
2a. SECURITY CLASSIFICATION AUTHORITY	3. DISTRIBUTION / AVAILABILITY OF REPORT UNLIMITED
2b. DECLASSIFICATION / DOWNGRADING SCHEDULE	
4. PERFORMING ORGANIZATION REPORT NUMBER(S) EVT 33-90-3	5. MONITORING ORGANIZATION REPORT NUMBER(S)
6a. NAME OF PERFORMING ORGANIZATION U.S. Army Defense Ammunition Center and School 6b. OFFICE SYMBOL (If applicable) SMCAC-DEV	7a. NAME OF MONITORING ORGANIZATION
6c. ADDRESS (City, State, and ZIP Code) ATTN: SMCAC-DEV Savanna, IL 61074-9639	7b. ADDRESS (City, State, and ZIP Code)
8a. NAME OF FUNDING / SPONSORING ORGANIZATION U.S. Army Armament Research, Development and Engineering Center 8b. OFFICE SYMBOL (If applicable) SMCAR-QAN-P (D)	9. PROCUREMENT INSTRUMENT IDENTIFICATION NUMBER
8c. ADDRESS (City, State, and ZIP Code) ATTN: SMCAR-QAN-P (D) Picatinny Arsenal, NJ 07806-5000	10. SOURCE OF FUNDING NUMBERS PROGRAM ELEMENT NO. / PROJECT NO. / TASK NO. / WORK UNIT ACCESSION NO.

11. TITLE (Include Security Classification)

Saudi Arabia (SA) Ammunition Temperatures in Open Storage, 1991

12. PERSONAL AUTHOR(S)

William R. Meyer

13a. TYPE OF REPORT	13b. TIME COVERED	14. DATE OF REPORT (Year, Month, Day)	15. PAGE COUNT
Final	FROM ——— TO ———	1991 November	

16. SUPPLEMENTARY NOTATION

17. COSATI CODES			18. SUBJECT TERMS (Continue on reverse if necessary and identify by block number)
FIELD	GROUP	SUB-GROUP	

19. ABSTRACT (Continue on reverse if necessary and identify by block number)

The U.S. Army Defense Ammunition Center and School (USADACS), Validation Engineering Division (SMCAC-DEV), was tasked by the U.S. Army Armament Research, Development and Engineering Center (ARDEC), Predictive Technology Branch, to conduct instrumentation in Saudi Arabia (SA) before, during, and after Operations Desert Shield/Desert Storm. The following report comprises the summation of tests conducted in SA prior to the ammunition being transported to the Kuwait ammunition supply point (ASP), where USADACS ammunition temperature monitoring program continued. During this period of testing, the maximum ammunition temperature recorded was on the TOW 2 BGM-71D missile on 23 June 1991 at 161.5 degrees Fahrenheit. The maximum temperature experienced by the 120mm tank ammunition during this same period was 151.1 degrees Fahrenheit. This report summarizes all ammunition temperatures recorded during this test period.

20. DISTRIBUTION / AVAILABILITY OF ABSTRACT XX UNCLASSIFIED/UNLIMITED ☐ SAME AS RPT. ☐ DTIC USERS	21. ABSTRACT SECURITY CLASSIFICATION UNCLASSIFIED	
22a. NAME OF RESPONSIBLE INDIVIDUAL JEROME H. KROHN	22b. TELEPHONE (Include Area Code) 815-273-8929	22c. OFFICE SYMBOL SMCAC-DEV

DD Form 1473, Jun 86 — Previous editions are obsolete

SECURITY CLASSIFICATION OF THIS PAGE
UNCLASSIFIED

U.S. ARMY DEFENSE AMMUNITION CENTER AND SCHOOL
VALIDATION ENGINEERING DIVISION
SAVANNA, IL 61074-9639

SAUDI ARABIA (SA)

AMMUNITION TEMPERATURES IN OPEN STORAGE

1991

TABLE OF CONTENTS

SAUDI ARABIA (SA)

ENVIRONMENTAL CONDITIONS ON SENSITIVE AMMUNITION
IN OPEN STORAGE

JUNE - NOVEMBER 1991

- 24 TYPES OF AMMUNITION MONITORED
  - TSAs 1, 4, AND 5

- DATA GATHERING EQUIPMENT
  - TWO WEATHER STATIONS
  - THREE CAMPBELL SCIENTIFIC DATA LOGGERS
  - NUMEROUS PORTABLE DATA LOGGERS

- PEAK TEMPERATURES
  - AMBIENT: 109.5 DEGREES FAHRENHEIT, 9 AUGUST 1991
  - EXTERNAL: TOW 2 PACKAGE, 161.5 DEGREES FAHRENHEIT, 23 JUNE 1991
  - INTERNAL: SHILLELAGH, 124.1 DEGREES FAHRENHEIT, 13 AUGUST 1991
  - EXTERNAL: 120MM TANK CONTAINER, 151.1 DEGREES FAHRENHEIT, 14 MAY 1991
  - INTERNAL: 120MM TANK CONTAINER, 112.2 DEGREES FAHRENHEIT, 13 JUNE 1991

- CONCLUSIONS
  - NO DIRECT CORRELATION BETWEEN EXTERNAL AND INTERNAL PACKAGE TEMPERATURES
  - INTERNAL PACKAGE TEMPERATURES EXCEEDED AMBIENT TEMPERATURE BY AN AVERAGE OF 5 DEGREES - 10 DEGREES FAHRENHEIT
  - EXTERNAL TEMPERATURES ON METAL CONTAINERS EXCEEDED WOODEN CONTAINERS; HOWEVER, THE HIGHER TEMPERATURES DISSIPATED QUICKER ON THE METAL CONTAINERS
  - SHIELDING DIVERTED SOLAR RADIATION RESULTING IN REDUCED TEMPERATURES

PART 1

EXECUTIVE SUMMARY

Ammunition was monitored in Saudi Arabia (SA) under open storage conditions April - November 1991. The primary goal of this program was to identify areas of concern that would jeopardize the serviceability of 24 types of ammunition susceptable to high temperatures/humidity during open storage in SA.

Environmental conditions (temperature, humidity, and solar radiation) during this test period were as follows: peak solar radiation occurred during April - June 1991, peak temperatures occurred during June - September 1991, and peak humidity occurred during September - October 1991.

The maximum peak external temperature recorded on all items was 161.5 degrees Fahrenheit for the TOW 2 BGM-71D missile on 23 June 1991. The 120mm tank ammunition reached a peak external temperature of 151.1 degrees Fahrenheit on 14 May 1991. All ammunition tested had a maximum external temperature averaging 140.3 +/- 21.2 degrees Fahrenheit.

The maximum peak internal temperature recorded during this program was 124.1 degrees Fahrenheit for the SHILLELAGH MGM-51 missile on 13 August 1991. The 120mm tank ammunition reached 112.2 degrees Fahrenheit on 13 June 1991. All items had a maximum internal temperature averaging 110.6 +/- 13.5 degrees Fahrenheit. In most cases, internal temperature was more reliable at determining deterioration than external. As such, it is unlikely that substantial deterioration took place on the items tested.

No direct correlation of peak external temperature with peak internal temperature could be derived from this study. For example, the TOW 2 BGM-71D missile would be expected to have the greatest internal temperature; however, it only obtained a peak internal temperature of 121.1 degrees Fahrenheit.

The highest ambient temperature recorded during this test period was 109.5 degrees Fahrenheit on 9 August 1991. The daily peak ambient temperature during the test period averaged 98.9 +/- 4.4 degrees Fahrenheit. The daily peak temperature within the ammunition averaged 103.6 +/- 9.5 degrees Fahrenheit. Therefore, it can be expected that average internal

ammunition temperatures will be approximately 5 to 10 degrees higher than ambient temperature over long periods of time.

Other conclusions include items that are susceptible to high moisture conditions are at greatest risk during late summer early fall versus late spring early summer.

Ammunition items that contain sensitive components at or near the skin surface should be considered high risk for thermal deterioration due to solar radiation and should be covered to avoid direct radiation.

In general, higher maximum peak external temperature were noted on metal versus wood shipping containers which was expected. For example, under identical conditions C786 in metal containers reached 150.5 degrees Fahrenheit versus 132.3 degrees Fahrenheit for C326 in wooden boxes. However, when average peak daily internal temperatures are compared, both items were fairly close; i.e., 103.2 degrees Fahrenheit versus 102.2 degrees Fahrenheit. This strongly suggests that items having high skin temperatures dissipate off the heat fairly rapidly and do not transmit heat inward to the degree expected.

A continuation of this temperature monitoring program is planned with an expansion to 57 ammunition items, once a permanent storage site is established within Southwest Asia (SWA). Reference Report No. EVT 33-90-M, U.S. Army Defense Ammunition Center and School (USADACS), SMCAC-DEV, May 1991, Operation Desert Storm, Environmental Instrumentation and Monitoring Ammunition in Open Storage.

PART 2

INTRODUCTION

Ammunition was monitored under open storage conditions within Saudi Arabia (SA) in support of U.S. Army Armament Research, Development and Engineering Center (ARDEC), Predictive Technology Branch. The primary goal of this study was to identify areas of concern that would jeopardize the serviceability of ammunition within SA due to high temperature, humidity, and solar radiation. U.S. Army Defense Ammunition Center and School (USADACS), SMCAC-DEV, set up instrumentation packages with Quality Assurance Specialist (Ammunition Surveillance) QASAS personnel performing onsite setup.

Tests were conducted on 24 ammunition items from 20 April - 1 November 1991. Tests began on two items, the 120mm APFSDS-T M829A1 and 120mm APFSDS-T M829 rounds, on 20 April 1991 with the balance of ammunition instrumented thereafter. Tables shown within this report are the highest peak external and internal temperatures recorded during the test period, as well as the highest average daily peak internal and external temperatures during the test period. Graphs shown within this report are the actual temperatures of the ammunition over the life of the test.

PART 3

PHOTOGRAPHS

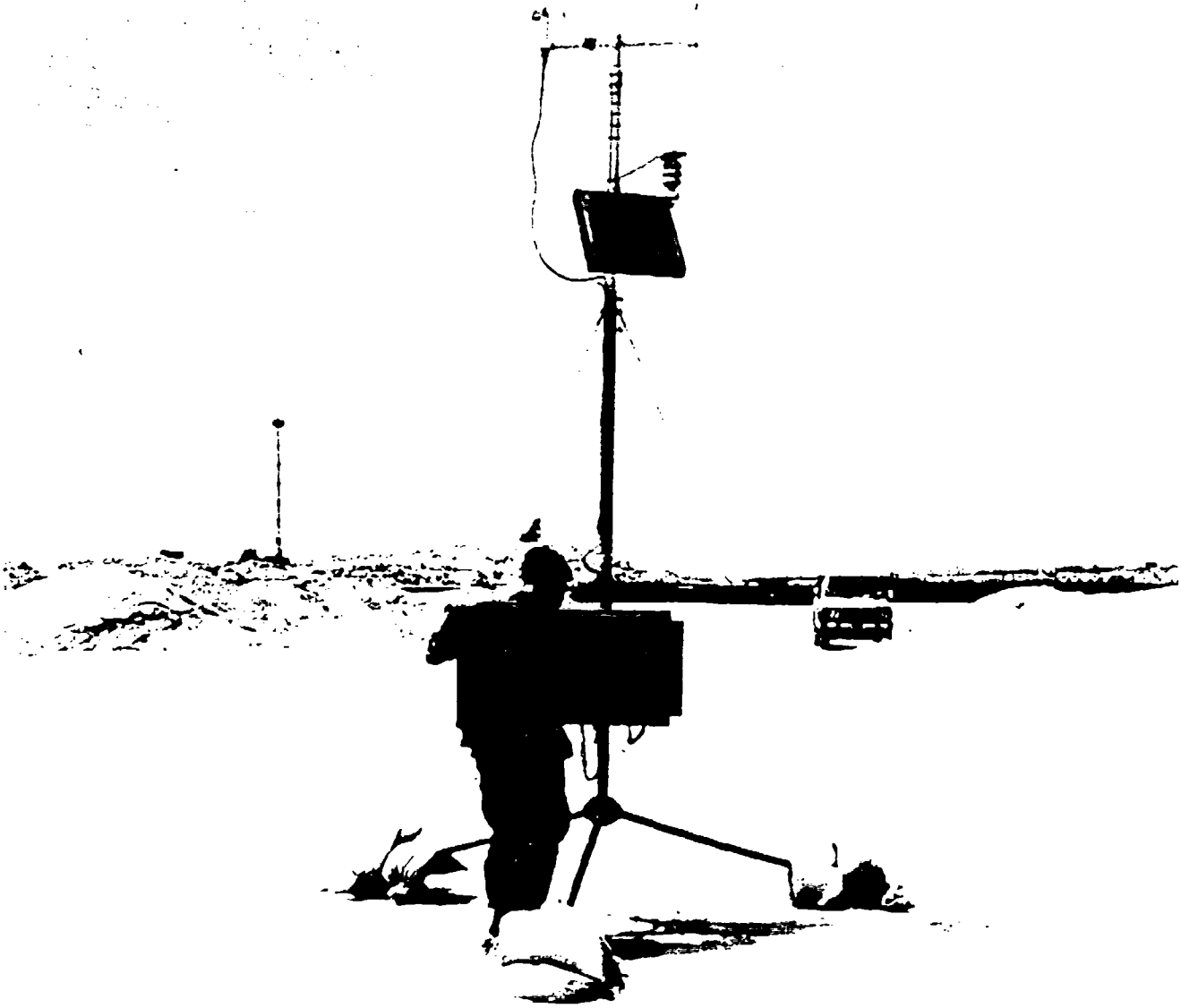

	U.S. ARMY DEFENSE AMMUNITION CENTER AND SCHOOL - SAVANNA, IL	
This photo shows the weather station and instrumentation package installed at TSA 1. Note, the wind speed, wind direction, and temperature/humidity sensor located above the solar radiation panel.		

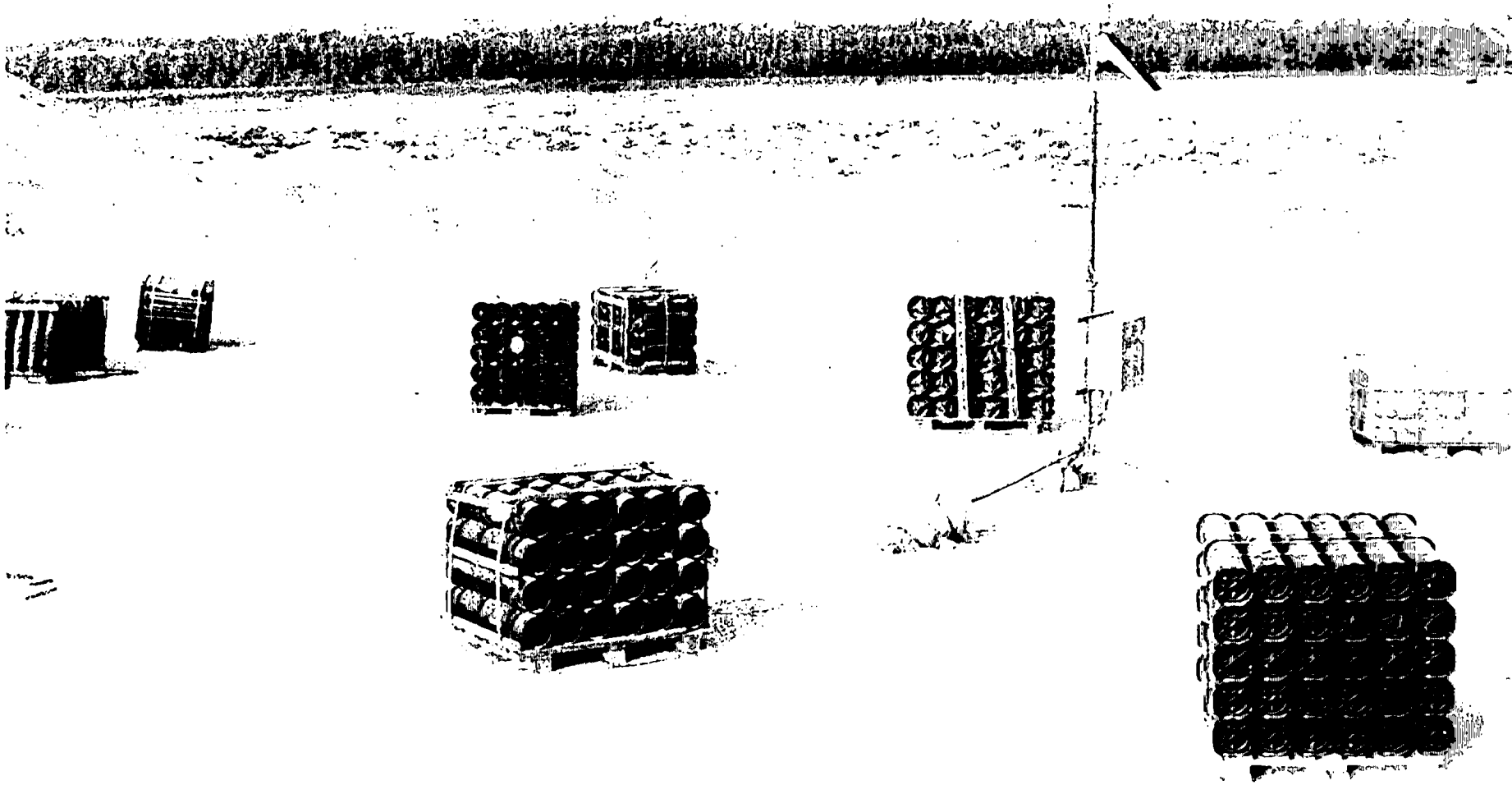

	U.S. ARMY DEFENSE AMMUNITION CENTER AND SCHOOL - SAVANNA, IL	
This photo shows 8 of the 23 test pallets at TSA 1.		

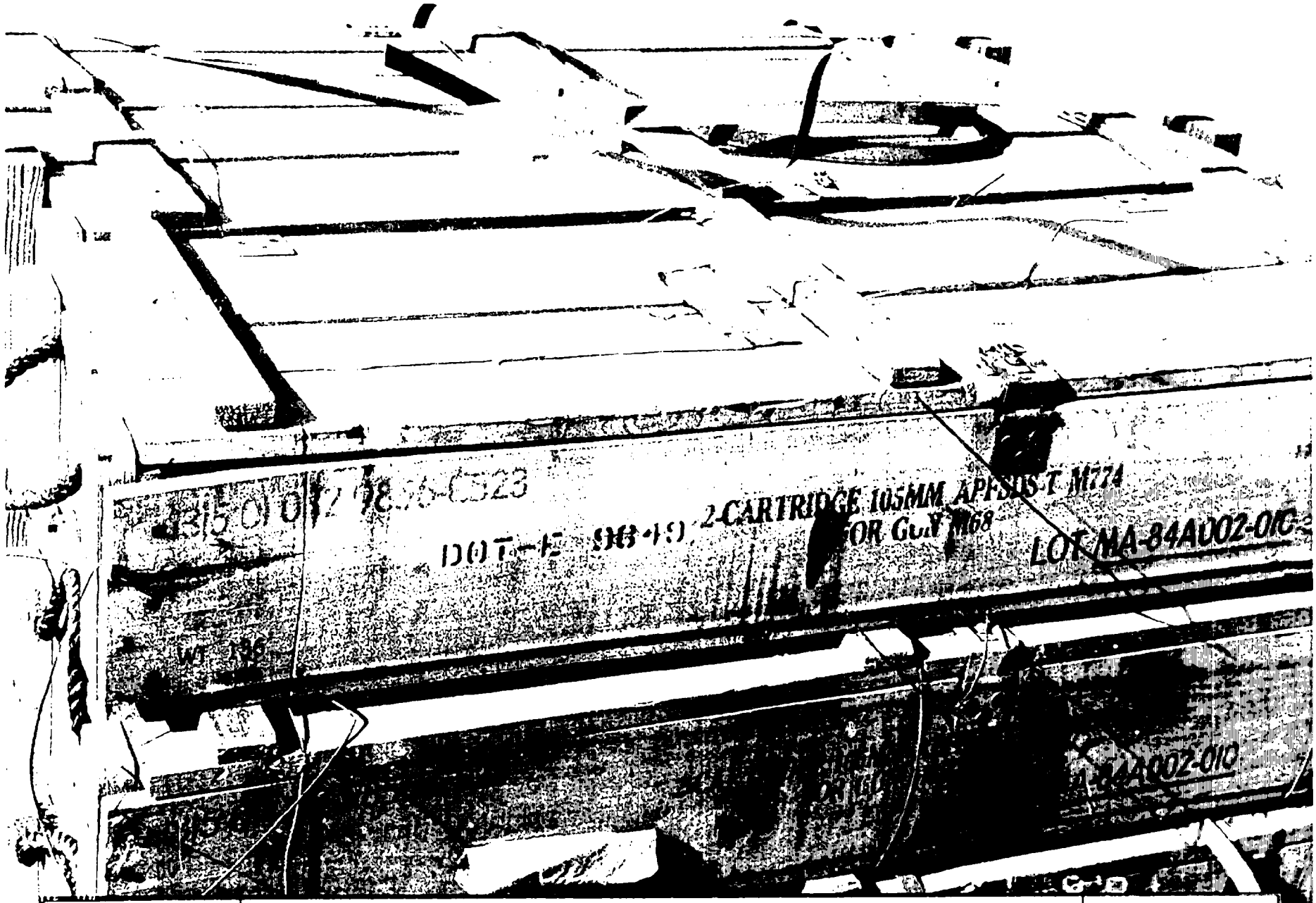

U.S. ARMY DEFENSE AMMUNITION CENTER AND SCHOOL - SAVANNA, IL

This photo shows a typical exterior temperature probe installed in 105mm containers packed in wooden boxes. Note, the crack on the left-hand side of the box where the interior probe was installed.

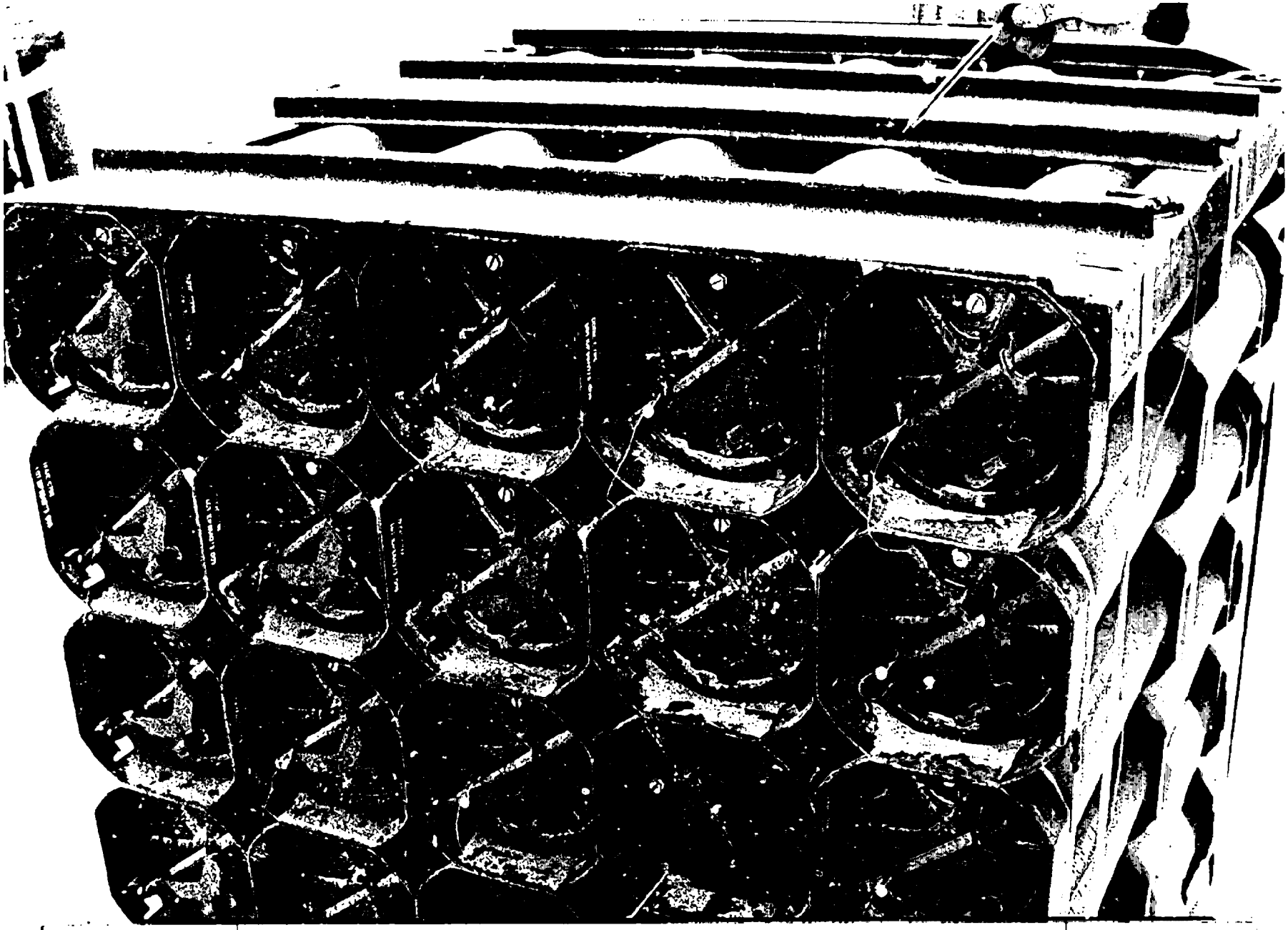

U.S. ARMY DEFENSE AMMUNITION CENTER AND SCHOOL - SAVANNA, IL

This photo shows a typical exterior temperature probe installed on a 120mm tank ammunition container. Note, the third row from the top is where the interior temperature probe was installed.

PART 4

AMMUNITION ITEMS TESTED

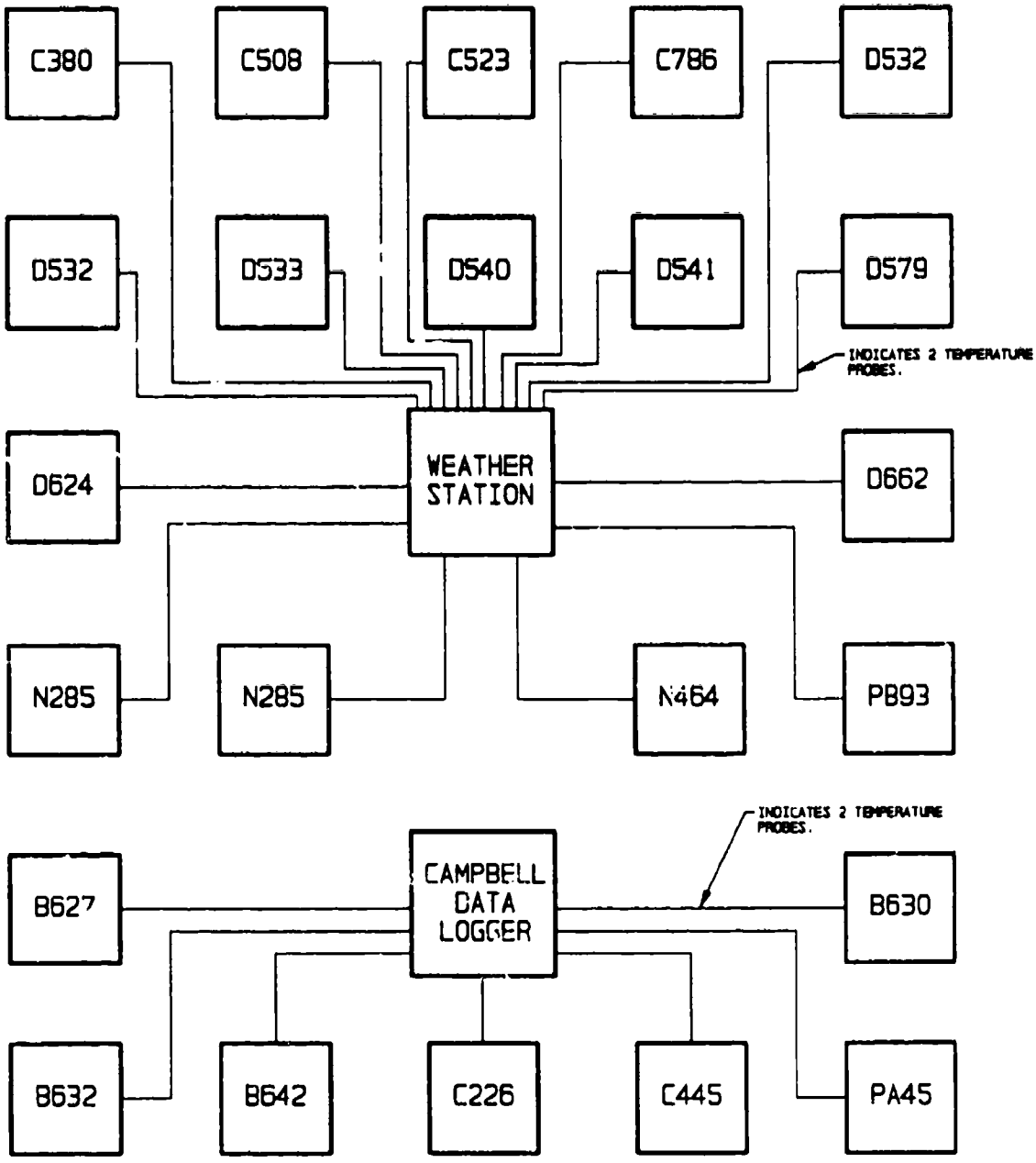

FOR INFORMATION ONLY

TITLE	DWG NO	
SCHEMATIC DIAGRAM OF TSA #1 IN SAUDI ARABIA	90-033-0-S00019	
	VALIDATION ENGINEERING DIVISION	SHEET 1 OF 1

Items Instrumented at TSA #1

ITEM	DODIC	LOT#	INSTALLED	PAGES
CTG, 60MM ILLUM M83A3	B627	LOW-69-64	07-14-91	7-2 & 7-3
CTG, 60MM SMK WP M302A1	B630	PB-1-2A	07-14-91	7-4 & 7-5
CTG, 60MM HE M49A4	B632	MA-19-88	07-14-91	7-6 & 7-7
CTG, 60MM HE M720	B642	MA-89M030-001	07-14-91	7-8 & 7-9
CTG, 81MM ILLUM M301A3	C226	LOW-99-12	07-14-91	7-10 & 7-11
CTG, 120MM APFSDS-T M829A1	C380	MHM90D094-005	05-12-91	7-12 & 7-13
CTG, 105MM HE M1 W/O FUZE	C445	JA-69-29	07-14-91	7-14 & 7-15
CTG, 105MM HEAT-T M456A2	C508	MA-88B144H001	06-07-91	7-16 & 7-17
CTG, 105MM APFSDS-T M774	C523	MA84A002-010	06-10-91	7-18 & 7-19
CTG, 120MM APFSDS-T M829	C786	10P88A073-009	05-12-91	7-22 & 7-23
CHG, PROP 155MM RB M203	D532	IND81H-070056	06-07-91	7-26 & 7-27
CHG, PROP 155MM RB M203	D532	IND90D-071280	06-07-91	7-26 & 7-27
CHG, PROP 155MM RB M119A2 W/O PRIMER	D533	IND90A-071303	06-10-91	7-28 & 7-29
CHG, PROP 155MM GB M3A1	D540	IND87G-070748	06-10-91	7-30 & 7-31
CHG, PROP 155MM WB M4A2	D541	BAJ-63448	06-10-91	7-32 & 7-33
PROJ, 155MM HE RAP M549A1 (COMP B)	D579	10P81U03L-019A	06-10-91	7-34 & 7-35
PROJ, 8IN HE RAP M650	D624	10P88U050-001	06-10-91	7-36 & 7-37
CHG, PROP 8IN WB M188A1 W/O PRIMER	D662	IND85D-070342	06-10-91	7-38 & 7-39
FUZE, MTSQ M577/M577A1 W/O BOOSTER	N285	BWV-7-14	06-07-91	7-44 & 7-45
FUZE, MTSQ M577/M577A1 W/O BOOSTER	N285	BWV82C012-017	06-07-91	7-44 & 7-45
FUZE, PROX M732 NON-PROP PKG	N464	LS-83L013-003	06-07-91	7-46 & 7-47
Shillelagh Missile	PA45	PHI-8-31C	07-14-91	7-48 & 7-49
TOW 2	PB93	HAQ-3148-4	06-10-91	7-50 & 7-51

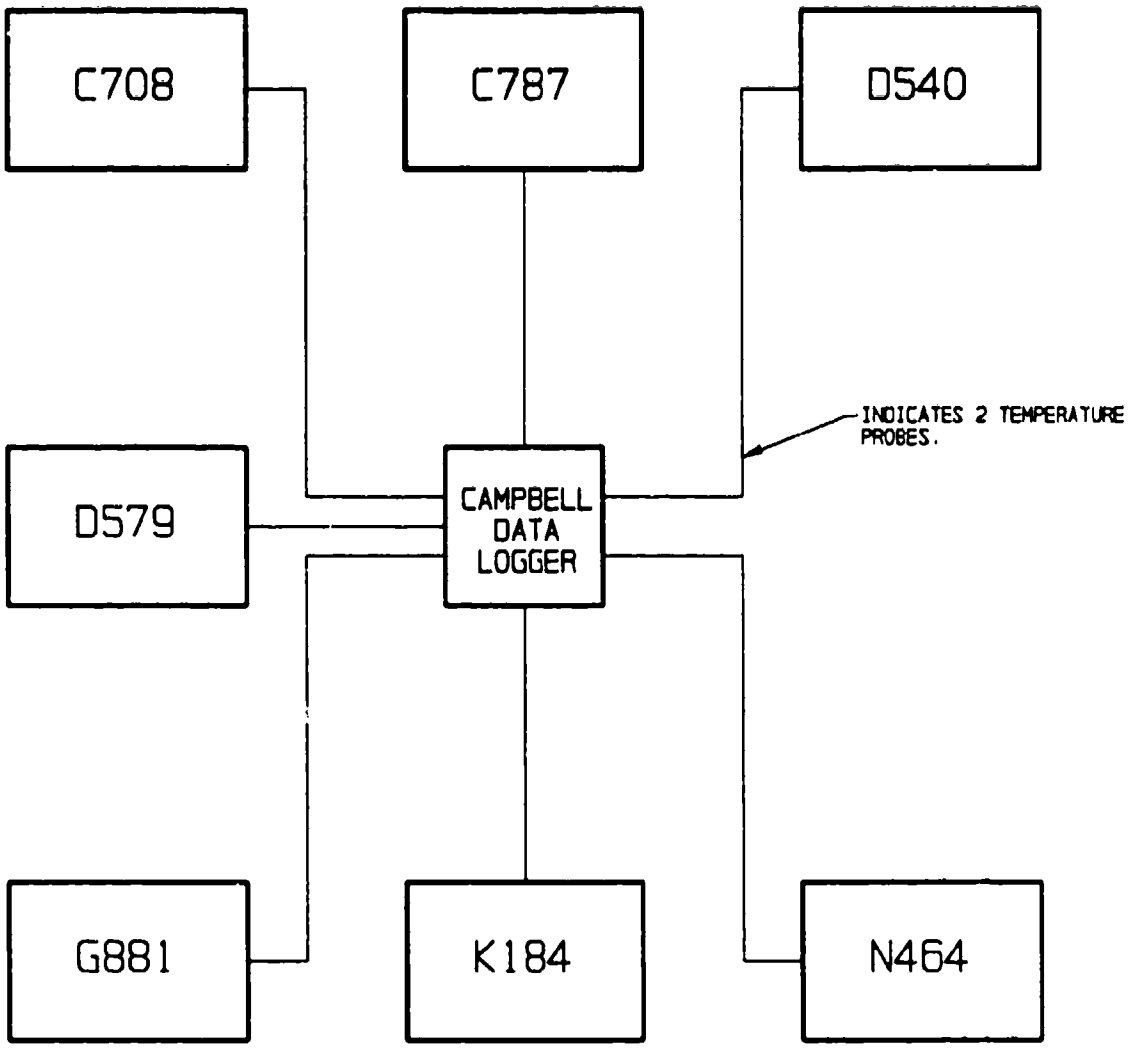

FOR INFORMATION ONLY

TITLE	DWG NO	
SCHEMATIC DIAGRAM OF TSA #5 IN SAUDI ARABIA	90-033-0-S00020	
	VALIDATION ENGINEERING DIVISION	SHEET 1 OF 1

Items Instrumented at TSA #5

ITEM	DODIC	LOT #	INSTALLED	PAGES
CTG, 4.2IN SMK WP M328A1 W/PD FUZE	C708	RD-4-7A	07-27-91	7-20 & 7-21
CTG, 120MM HEAT-MP-T M830	C787	MM-896-501-003	07-27-91	7-24 & 7-25
CHG, PROP 155MM GB M3A1	D540	RAD-69169-73	07-27-91	7-30 & 7-31
PROJ, 155MM HE RAP M549A1 (COMP B)	D579	IOP86B034-010A	07-27-91	7-34 & 7-35
GRENADE, HAND FRAG M67	G881	LS-56-3C	07-27-91	7-40 & 7-41
MINE, AT HEAVY M75 (GEMSS)	K184	IOP90D007-003	07-27-91	7-42 & 7-43
FUZE, PROX M732 NON-PROP PKG	N464	LS-84B013-007	07-27-91	7-46 & 7-47

PART 5

DEFINITIONS

External Maximum	(Ext Max) Is the highest external temperature recorded during the test period over 90 minutes.
External Average	(Ext Avg) Is the highest average external daily temperature over 90 minutes.
Internal Maximum	(Int Max) Is the highest maximum internal temperature during the test period over 90 minutes.
Internal Average	(Int Avg) Is the highest average internal daily temperature over 90 minutes.

PART 6

TEST RESULTS

A. Environmental Conditions in SA. Environmental conditions during the test period showed the peak solar radiation occurring during April - July 1991, with the highest average solar intensity from April - June 1991. The above was somewhat unexpected, it would be typically expected to have the highest solar radiation during the midsummer months. Maximum temperatures were obtained from June - August 1991. Generally speaking, humidity in SA increased during the test period while wind speed declined.

Table 1

Environmental Conditions During Test Period

Date	Temperature Degree F.		Humidity Percent		Wind Speed MPH		Solar Radiation Langley	
	Max	Avg. High	Max	Avg. High	Max	Avg. High	Max	Avg. High
Apr-Jun	107.2	94.6	60.3	40.6	30.7	18.1	1.1	0.9
Jun-Jul	109.1	102.8	91.8	51.9	27.3	15.1	1.1	0.8
Jul-Sep	109.5	103.3	100+	51.7	25.8	15.4	0.9	0.8
Sep-Oct	103.1	98.6	100+	89.2	25.2	12.0	0.9	0.8

B. 120mm APFSDS-T M829A1 Ammunition. The 120mm APFSDS-T M829A1 round experienced peak external temperatures in excess of 148 degrees Fahrenheit, with the average peak external temperature being 121.4 degrees Fahrenheit. Peak internal temperatures exceeded 112 degrees Fahrenheit, with the average peak internal temperature being 100.3 degrees Fahrenheit. Of interest during this test was the lack of variation in peak temperature during the test period. It would be expected that the peak temperatures during April - May 1991 would be lower than June - July 1991; however, this wasn't the case. Solar radiation was highest from May - July 1991; therefore, the higher external temperatures were recorded.

Table 2

Testing Conducted 20 April - 1 October 1991

Item: Ctg 120mm APFSDS-T M829A1

Date	DODIC	Ext Max. Degrees F.	Ext Avg. Degrees F.	Int Max. Degrees F.	Int Avg. Degrees F.
20 Apr - 2 Jun	C380	148.8	117.1	107.3	94.7
3 Jun - 18 Jul	C380	148.4	124.4	112.2	103.3
19 Jul - 1 Sep	C380	141.8	122.2	110.6	103.5
2 Sep - 1 Oct	C380	136.4	121.7	104.3	99.6

C. 120mm APFSDS-t M829 Ammunition. The 120mm APFSDS-T M829 round experienced slightly higher peak external temperatures than the M829A1 rounds at 151 degrees Fahrenheit. The average peak external temperature for this round was 121.2 degrees Fahrenheit, with the average internal peak temperature being 99.4 degrees Fahrenheit. The slight variations in temperatures experienced between the M829A1 and M829 rounds could be due to such variables as temperature probe location, amount of adhesive used to secure the probe, and variations in thermal mass, to name a few. As previously noted, this test showed higher peak external temperatures during the late spring and early summer than later in the summer. Again unexpected, but resulted from higher solar radiation levels during this period. Internal average peak temperatures increased through August 1991 then declined, as expected.

Table 3

Testing Conducted 20 April - 1 October 1991

Item: Ctg 120mm APFSDS-T M829

Date	DODIC	Ext Max. Degrees F.	Ext Avg. Degrees F.	Int Max. Degrees F.	Int Avg. Degrees F.
20 Apr - 2 Jun	C786	151.1	118.0	107.6	94.3
3 Jun - 18 Jul	C786	150.5	124.9	108.9	102.2
19 Jul - 1 Sep	C786	142.5	121.3	109.4	102.7
2 Sep - 1 Oct	C786	136.0	120.6	102.5	98.3

D. Ammunition Tested June - July 1991. During June 1991, 21 additional ammunition items were tested. These items showed substantial greater variations in peak temperatures than the 120mm rounds. The 8-inch HE M650 projectile had the lowest temperature at 117.3 degrees Fahrenheit to the TOW 2 BGM-71D missile being the highest at 161.5 degrees Fahrenheit. Average peak external temperatures were substantially closer from 109.5 degrees Fahrenheit to 129.1 degrees Fahrenheit with all ammunition being within 20 degrees of each other including the TOW 2 BGM-71D missile at 126.3 degrees Fahrenheit. Average peak internal temperatures showed even smaller variation between ammunition with 101.6 degrees Fahrenheit being the lowest versus 111.3 degrees Fahrenheit being the highest, and within several degrees of the ambient peak temperatures. Again, these findings were surprising in the fact that some overpack containers are made of wood, a poor heat transfer media, and others are made of metal, a good conductor of heat. This strongly suggests that items sensitive to high skin temperatures dissipate off heat fairly rapidly and don't transmit heat inward to the extent expected. As an example, the 8-inch M188A1 propelling charge container with metal canister had peak external temperatures of 149.5 degrees Fahrenheit with peak internal temperatures of only 110.9 degrees Fahrenheit, or approximately 40 degrees lower. During this time period, the TOW 2 BGM-71D missile showed the highest external skin temperature and can be contributed to the peak solar radiation during this timeframe.

Table 4

Testing Conducted 4 June - 18 July 1991

Item	DODIC	Ext Max. Degrees F.	Ext Avg. Degrees F.	Int Max. Degrees F.	Int Avg. Degrees F.
Ctg 60mm Ill M83A3	B627	133.6	127.7	106.6	101.6
Ctg 60mm Smk M302A1	B630	131.9	129.1	105.5	103.1
Ctg 60mm HE M49A4	B632	123.7	121.0	107.7	103.4
Ctg 60mm HE M7202	B642	131.8	129.1	113.1	107.2
Ctg 81mm Ill M301A3	C226	132.3	128.1	104.3	103.2
Ctg 105mm HE M1	C445	133.0	128.8	109.8	108.2
Ctg 105mm HE M456A2	C508	148.2	126.3	115.3	106.6
Ctg 105mm APFSDS-T M774	C523	149.5	127.0	110.0	103.2

Chg Prop 155mm M203	D532	145.7	124.1	119.5	108.9
Chg Prop 155mm M203	D532	147.1	127.4	112.6	105.6
Chg Prop 155mm M119A2	D533	142.9	125.0	120.0	108.6
Chg Prop 155mm M3A1	D540	147.8	126.9	114.4	106.4
Chg Prop 155mm M4A2	D541	143.9	124.0	112.9	106.3
Proj 155mm HE M549A1	D579	128.5	112.7	123.6	110.5
Proj 8-in HE M650	D624	117.3	109.5	114.6	107.9
Chg Prop 8-in M188A1	D662	149.5	128.5	110.9	105.2
Fuze MTSQ M577	N285	147.4	125.4	111.1	104.4
Fuze MTSQ M577	N285	139.7	119.2	114.2	105.4
Fuze Prox M732	N464	141.6	121.2	110.4	103.6
SHILLELAGH MGM-51	PA45	129.2	126.1	115.1	111.3
TOW 2 BGM-71D	PB93	161.5	126.3	121.1	110.6

E. Ammunition Tested July - September 1991. During 9 July - 1 September 1991 the maximum peak external temperature reached was 157.6 degrees Fahrenheit in the 4.2-in Smk WP M328A1 w/PD Fuze, with the lowest peak temperature, again, being the 8-inch projectiles, at 118.9 degrees Fahrenheit. The 8-inch projectiles showed the lowest temperature gain due to the mass required to be heated prior to elevated skin temperatures. During this phase of testing all items had peak external temperatures of 138.3 degrees Fahrenheit plus or minus 19.4 degrees Fahrenheit. As noted during the first phase of testing on these 24 items, the average internal peak temperatures on all items were fairly close at 107.7 degrees Fahrenheit plus or minus 5.4 degrees Fahrenheit. This data again suggests that internal temperatures are not directly related to the material the ammunition is packed in. Reference: wood, plastic, cardboard, etc., and the fact that internal temperatures remain fairly close even though some items have high external skin temperatures.

Table 5

Testing Conducted 19 July - 1 September 1991

Item	DODIC	Ext Max. Degrees F.	Ext Avg. Degrees F.	Int Max. Degrees F.	Int Avg. Degrees F.
Ctg 60mm Ill M83A3	B627	149.6	129.5	105.3	102.3
Ctg 60mm Smk M302A1	B630	150.9	130.7	107.4	104.4
Ctg 60mm HE M49A4	B632	143.8	126.6	107.1	103.7
Ctg 60mm HE M7202	B642	148.2	130.5	111.1	107.0
Ctg 81mm Ill M301A3	C226	135.1	123.8	107.7	104.8
Ctg 105mm HE M1	C445	149.9	130.1	114.7	109.8
Ctg 105mm HE M456A2	C508	144.4	123.7	116.7	107.8
Ctg 105mm APFSDS-T M774	C523	146.4	124.6	108.7	102.7
Ctg 4.2-in Smk WP M328A1 w/PD Fuze	C708	157.6	146.3	105.7	101.8
Ctg 120mm HEAT-MP-T	C787	155.9	142.8	112.0	107.9
Chg Prop 155mm M203	D532	142.1	124.9	111.6	104.8

Chg Prop 155mm M203	D532	139.3	121.3	118.3	109.3
Chg Prop 155mm M119A2	D5[illegible]	142.9	123.6	115.7	107.7
Chg Prop 155mm M3A1	D540	143.3	124.0	112.6	106.0
Chg Prop 155mm M3A1	D540	152.4	139.4	107.1	102.6
Chg Prop 155mm M4A2	D541	140.2	120.7	112.6	105.3
Proj 155mm HE M549A1	D579	121.8	109.5	119.1	108.2
Proj 155mm HE M549A1	D579	145.7	145.7	109.5	106.1
Proj 8-in HE M650	D624	118.9	110.0	114.0	107.1
Chg Prop 8-in M188A1	D662	144.4	125.2	112.5	106.1
Mine AT Heavy M75 (GEMSS)	K184	152.4	138.5	110.0	105.5
Fuze MTSQ M577	N285	143.7	123.2	111.1	104.2
Fuze MTSQ M577	N285	135.5	117.1	111.9	104.8
Fuze Prox M732	N464	139.2	119.2	109.9	104.3
Fuze Prox M732	N464	155.2	141.5	110.5	106.2
SHILLELAGH MGM-51	PA45	147.8	132.6	124.1	113.1
TOW 2 BGM-71D	PB93	136.2	113.2	121.9	109.5

F. Ammunition Tested September - October 1991. During this series of tests, maximum peak external temperature reached 154 degrees Fahrenheit for the SHILLELAGH MGM-51 missile with peak temperatures for all items being 133.8 plus or minus 20 degrees Fahrenheit. Irrespective of the external temperatures, average peak internal temperatures ranged from 103.5 degrees Fahrenheit plus or minus 9.4 degrees Fahrenheit. Of interest during this test is the over all reduction in the external maximum temperature of the TOW 2 BGM-71D missile and the general increase in temperature of the SHILLELAGH MGM-51 missile (refer to tables 4 - 6 for temperature details). This general trend could be due to the location of temperature probes on the missile's surface with the SHILLELAGH MGM-51 exposed to direct sunlight for a longer period of time than the TOW 2 BGM-71D missile during late summer and early fall timeframe.

Table 6

Testing Conducted 2 September - 16 October 1991

Item	DODIC	Ext Max. Degrees F.	Ext Avg. Degrees F.	Int Max. Degrees F.	Int Avg. Degrees F.
Ctg 60mm Ill M83A3	B627	143.7	130.7	97.2	94.5
Ctg 60mm Smk M302A1	B630	147.8	132.8	100.5	100.1
Ctg 60mm HE M49A4	B632	141.5	128.2	98.8	98.2
Ctg 60mm HE M7202	B642	142.2	130.4	102.1	98.9
Ctg 81mm Ill M301A3	C226	122.8	114.0	100.2	100.0
Ctg 105mm HE M1	C445	146.4	131.3	108.7	106.2
Ctg 105mm HE M456A2	C508	138.7	124.8	111.9	105.3
Ctg 105mm APFSDS-T M774	C523	143.2	124.2	102.8	98.6
Ctg 4.2-in Smk WP M328A1 w/PD Fuze	C708	152.9	131.5	101.5	94.1
Ctg 120mm HEAT-MP-T M830	C787	150.5	129.6	112.4	102.4
Chg Prop 155mm M203	D532	134.5	120.8	113.0	106.4

Chg Prop 155mm M203	D532	137.5	123.9	104.3	100.5
Chg Prop 155mm M119A2	D533	140.1	123.3	108.7	103.1
Chg Prop 155mm M3A1	D540	140.4	124.7	106.5	102.0
Chg Prop 155mm M3A1	D540	144.5	125.5	101.3	94.7
Chg Prop 155mm M4A2	D541	135.0	120.3	105.1	101.1
Proj 155mm HE M549A1	D579	113.2	105.9	111.9	105.4
Proj 155mm HE M549A1	D579	151.5	131.3	106.8	98.2
Proj 8-in HE M650	D624	116.8	108.8	108.9	103.6
Chg Prop 8-in M188A1	D662	141.0	124.5	110.2	104.2
Mine AT Heavy M75 (GEMSS)	K184	143.9	124.3	105.8	96.8
Fuze MTSQ M577	N285	137.9	122.9	102.4	98.6
Fuze MTSQ M577	N285	127.3	116.0	102.5	100.1
Fuze Prox M732	N464	134.9	118.7	103.3	99.5
Fuze Prox M732	N464	144.1	126.0	105.0	96.7
SHILLELAGH MGM-51	PA45	154.4	140.1	120.4	112.8
TOW 2 BGM 71D	PB93	135.7	116.0	115.5	107.9

G. Ammunition Tested October - November 1991. During the final series of tests the 155mm HE M549A1 experienced the highest external temperature of 131.7 degrees Fahrenheit as well as the highest average external temperature of 112.9 degrees Fahrenheit, which is to be expected. On the other hand, peak internal temperature was found in the 120mm HEAT-MP-T M830 to be 99.7 degrees Fahrenheit. This item also had the highest average internal temperature of 88.8 degrees Fahrenheit.

TABLE 7

Testing Conducted 17 October - 30 November 1991

Item	DODIC	Ext Max. Degrees F.	Ext Avg. Degrees F.	Int Max. Degrees F.	Int Avg. Degrees F.
Ctg 4.2-in Smk WP w/PD Fuze	C708	127.4	111.5	86.5	78.7
Ctg 120mm HE-MP-T M830	C787	103.3	111.1	99.7	88.8
Chg Prop 155mm M3A1	D540	120.5	105.0	85.8	78.5
Proj 155mm HE M549A1	D579	131.7	112.9	92.1	82.2
Mine AT Heavy M75 (GEMSS)	K184	122.2	104.7	91.6	81.4
Fuze Prox M732	N464	124.0	107.8	89.4	79.4

PART 7

THERMAL COUPLE PROBE LOCATIONS

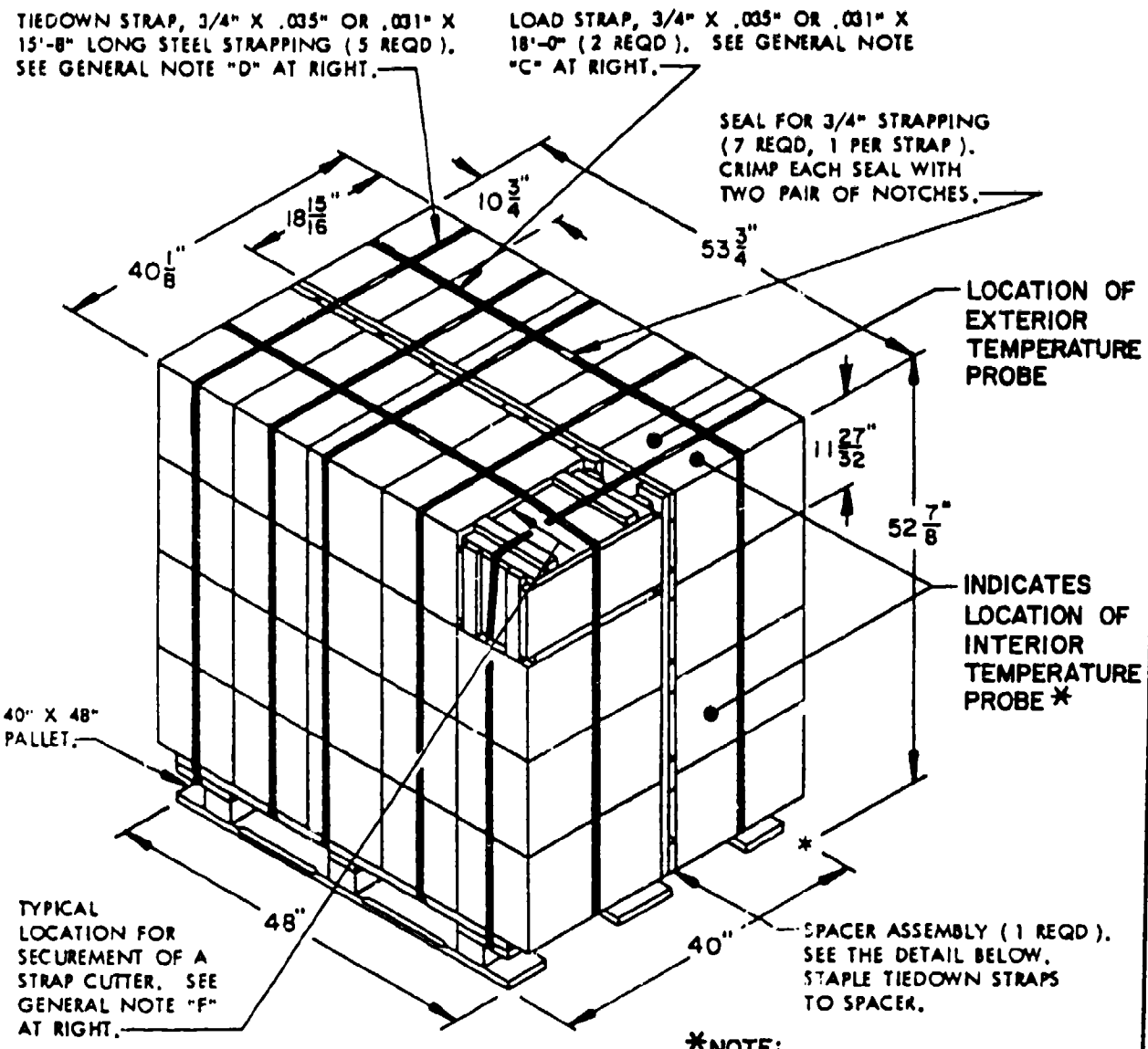

*NOTE: POSITION PROBE INSIDE INNER PACK

PALLET UNIT

SEE GENERAL NOTE "B" AT RIGHT.

40 BOXES OF 60MM CARTRIDGE (9 PER BOX) @ 57 LBS	2,280 LBS (APPROX)
DUNNAGE	56 LBS
PALLET	80 LBS
TOTAL WEIGHT	2,416 LBS (APPROX)
CUBE	66.0 CU FT (APPROX)

DODIC: B627

DRAFTSMAN TRS	TITLE 60 MM ILLUM. MORTAR, M83A3
TEST ENGINEER	
CHIEF, VALIDATION ENGINEERING DIVISION	U.S. ARMY DEFENSE AMMUNITION CENTER AND SCHOOL, SAVANNA, ILLINOIS 61074-9639

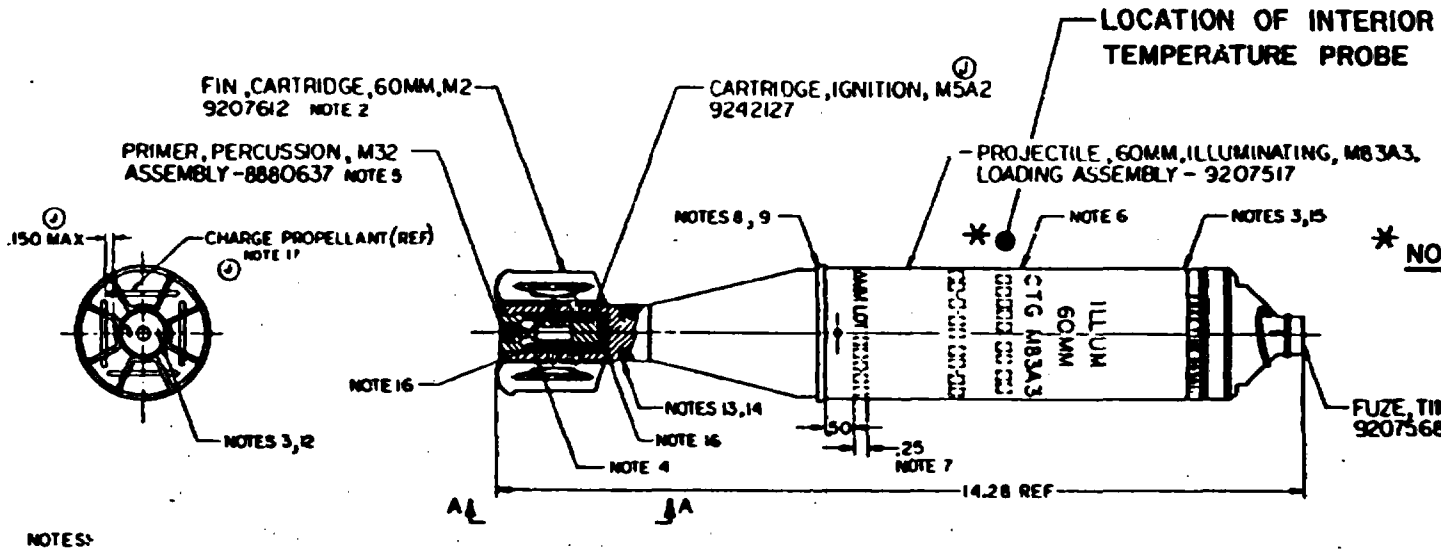

* NOTE: PROBE SHOULD NOT BE IN CONTACT WITH CARTRIDGE; OR USE INERT CARTRIDGE.

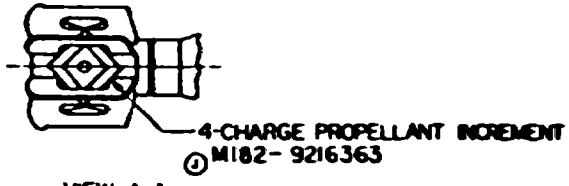

VIEW A-A

NOTES:

1- SPEC MIL-A-2550 AND MIL-C-3972 APPLY.
2- WHEN STAKED FUZE DISASSEMBLY TORQUE 100 INCH LB.
3- STAKE 2 PLACES, 180° APART.
4- PLACE RED END OF CARTRIDGE NEXT TO PRIMER.
5- PRIMER MUST BE ASSEMBLED FLUSH OR BELOW FLUSH TO REAR OF CARTRIDGE CONTAINER.
6- RETOUCH EXTERIOR SURFACE EXCEPT FUZE, AND FIN. FINISH NO. 201 OR 202 OF MIL-STD-171 WHITE NO. 37875.
7- MARK AMMUNITION LOT NUMBER AND SYMBOL OF LOADER WITH STENCIL INK, BLACK NO. 37038, SPEC TT-I-558 (NOTE 10).
8- BOURRELET AFTER RETOUCHING SHALL PASS 2.368 DIAMETER RING GAGE.
9- ASSEMBLY MUST FREELY ENTER PROFILE AND ALIGNMENT GAGE.
10- UNTOLERANCED DIMENSIONS NEED NOT BE GAGED.
11- ALTERNATIVE:- INK, COMMERCIAL DWG 9211788.
12- ALTERNATIVE:- ASSEMBLE WITH CEMENT, PETTMAN, TYPE A, JAN-C-99. TORQUE TO 30 INCH POUNDS WHILE CEMENT IS WET.
13- COAT THREADS OF FIN WITH SEALING COMPOUND, THREAD, POLYMERIZING, ROOM TEMPERATURE, MIL-S-3927.
14- MUST WITHSTAND 100 INCH POUND TORQUE IN DIRECTION OF ASSEMBLY WHILE CEMENT IS WET WITHOUT MOVEMENT.
15- ALTERNATIVE:- ASSEMBLE WITH CEMENT, PETTMAN, TYPE A, JAN-C-99 (NOTE 14).
16- APPLY CIRCUMFERENTIAL BEAD OF RTV 102, PART NO. 9233455; APPROX 1/16 x 1/16, AT POINT OF CONTACT OF IGN CRTG ROLL CRIMP AND BOTH CAVITY OF FIN ASSY, M2, AND SHOULDER OF PRIMER-PERCUSSION, M32.
17- ASSEMBLE CHARGES TO FLAT OR CONCAVE CONFIGURATION AS SHOWN.

DODIC: B627

PART NO. 9207516

9207516	16 APR 65	CARTRIDGE, 60MM, ILLUMINATING, M83A3 WITH FUZE, TIME, M65A1	
		D 19203	9207516

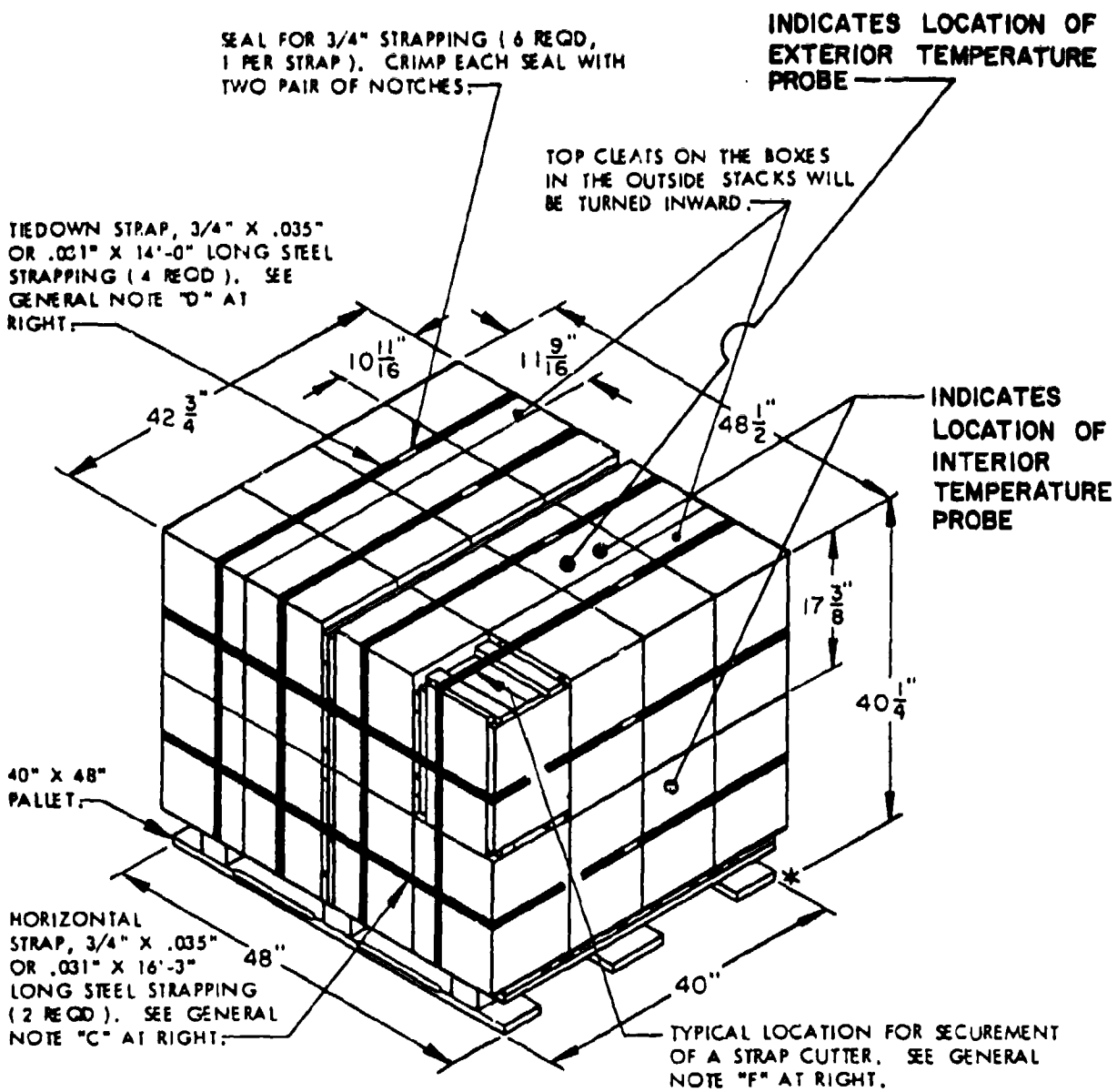

PALLET UNIT

SEE GENERAL NOTE "B" AT RIGHT.

32 BOXES OF 60MM CARTRIDGES (9 PER BOX) @ 57 LBS	1,824 LBS (APPROX)
DUNNAGE	22 LBS
PALLET	80 LBS
TOTAL WEIGHT	1,926 LBS (APPROX)
CUBE	48.3 CU FT (APPROX)

DODIC: B630

DRAFTSMAN TRS	TITLE CARTRIDGE, 60 MM SMOKE WP M302A1
TEST ENGINEER	
CHIEF, VALIDATION ENGINEERING DIVISION	U.S. ARMY DEFENSE AMMUNITION CENTER AND SCHOOL, SAVANNA, ILLINOIS 61074-9639

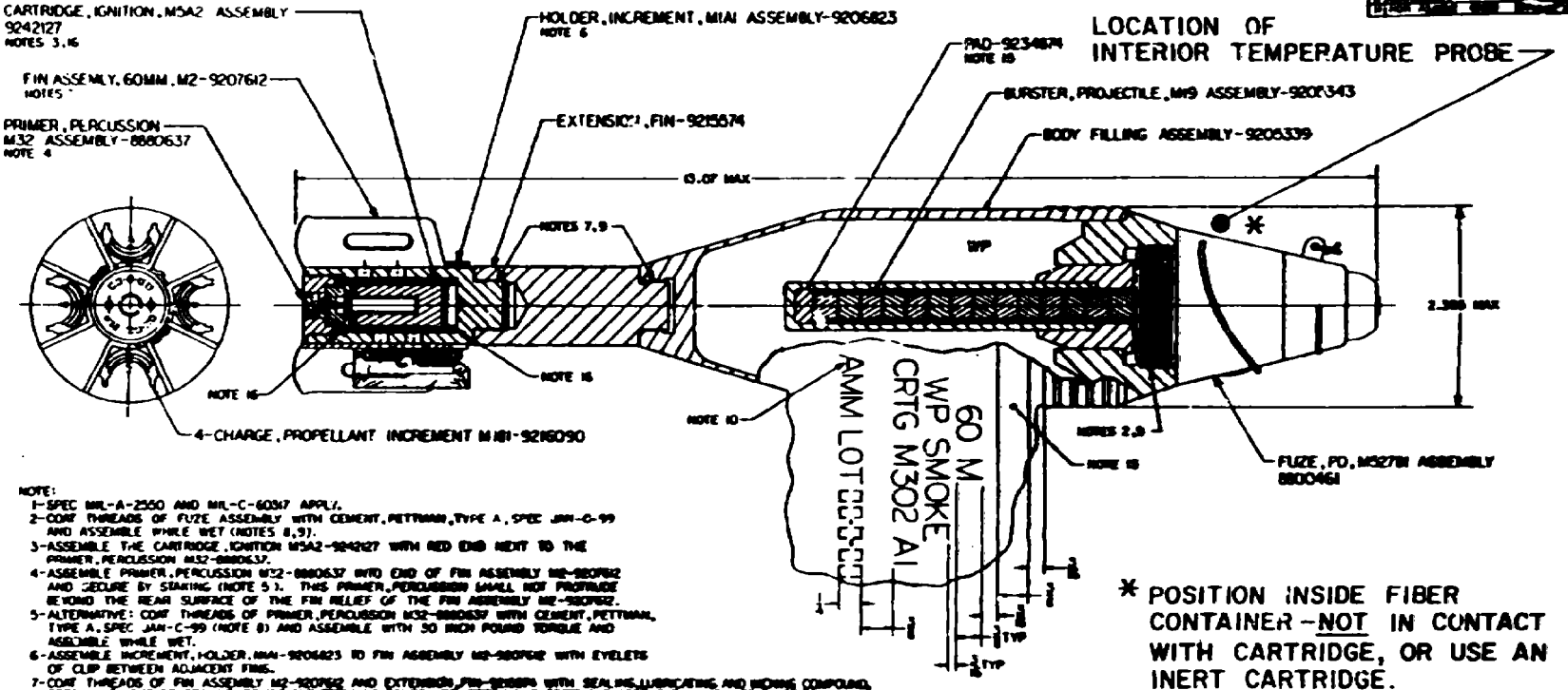

NOTE:

1-SPEC MIL-A-2550 AND MIL-C-60367 APPLY.

2-COAT THREADS OF FUZE ASSEMBLY WITH CEMENT, PETTMAN, TYPE A, SPEC JAN-C-99 AND ASSEMBLE WHILE WET (NOTES 8,9).

3-ASSEMBLE THE CARTRIDGE, IGNITION M5A2-9242127 WITH RED END NEXT TO THE PRIMER, PERCUSSION M32-8880637.

4-ASSEMBLE PRIMER, PERCUSSION M32-8880637 INTO END OF FIN ASSEMBLY M2-9207612 AND SECURE BY STAKING (NOTE 5). THIS PRIMER, PERCUSSION SHALL NOT PROTRUDE BEYOND THE REAR SURFACE OF THE FIN RELIEF OF THE FIN ASSEMBLY M2-9207612.

5-ALTERNATIVE: COAT THREADS OF PRIMER, PERCUSSION M32-8880637 WITH CEMENT, PETTMAN, TYPE A, SPEC JAN-C-99 (NOTE 8) AND ASSEMBLE WITH 50 INCH POUND TORQUE AND ASSEMBLE WHILE WET.

6-ASSEMBLE INCREMENT, HOLDER, M1A1-9206823 TO FIN ASSEMBLY M2-9207612 WITH EYELETS OF CLIP BETWEEN ADJACENT FINS.

7-COAT THREADS OF FIN ASSEMBLY M2-9207612 AND EXTENSION, FIN-9215674 WITH SEALING, LUBRICATING AND WORKING COMPOUND, SPEC MIL-S-4643 OR SEALING, LOCKING AND RETAINING COMPOUNDS, SPEC MIL-S-22473 AND ASSEMBLE WHILE WET (NOTE 9).

8-ALTERNATIVE MATERIAL: CEMENT-[illegible].

9-THE FUZE, FIN ASSEMBLY AND EXTENSION, FIN MUST WITHSTAND 100 INCH POUND TORQUE IN THE DIRECTION OF ASSEMBLY WHILE CEMENT IS WET, WITHOUT MOVEMENT.

10-RETOUCH EXTERIOR SURFACE OF BODY FILLING ASSEMBLY WHERE NECESSARY WITH FINISH 201J OF MIL-STD-171, LIGHT GREEN NO. 34564. STENCIL NOMENCLATURE, AMMUNITION LOT NUMBER AND DATE (MONTH AND YEAR) WITH INK, COLOR LIGHT RED NO.31136 SPEC TT-E-1735 TYPE I OR II. LOCATE AS SHOWN.

11-THIS CARTRIDGE MUST FREELY ENTER THE ALIGNMENT GAGE.

12-WEIGHT OF THE CARTRIDGE AS FIRED, WITHOUT SAFETY WIRE, PROPELLANT INCREMENT AND IGNITION CARTRIDGE IS APPROXIMATELY 4.10 POUNDS.

13-MARK BAND WITH INK, YELLOW NO.33538, SPEC TT-I-1735 TYPE I OR II.

14-UNTOLERANCED DIMENSION NEED NOT BE GAGED.

15-PAD-9234874 AND BURSTER, PROJECTILE M9 ASSEMBLY-9207343 MAY BE SUB-ASSEMBLED WITH ADHESIVE SPEC MMA A-125. MUST BE DRY BEFORE FINAL ASSEMBLY. USE ONE OR MORE AS REQUIRED TO OBTAIN A TIGHT ASSEMBLY BETWEEN BOTTOM OF CASING, BURSTER, M9 ASSEMBLY-[illegible] AND THE BURSTER, PROJECTILE, M9 ASSEMBLY-9207343.

16-APPLY A BEAD OF ADHESIVE SEALANT DWG 9133456 AT POINT OF CONTACT OF ROLLED CRIMP OF YELLOW END OF IGNITION CARTRIDGE M5A2, DWG 9242127 AND BASE OF THE CARTRIDGE HOUSING CAVITY OF FIN ASSEMBLY 60MM M2, DWG 9207612, INSERT IGNITION CARTRIDGE AND APPLY SECOND BEAD ON ROLLED CRIMP OF RED END OF IGNITER (OR CLOSE TO THE CRIMP AS GUIDED BY THE WALLS OF CAVITY) PRIOR TO SEATING THE PRIMER PERCUSSION M32-8880637. THE BEAD SIZE IS TO BE APPROX [illegible] INCH DIAMETER.

DODIC: B630

PART NO. 9215675

CARTRIDGE, 60MM, SMOKE, WP, M302A1

9215675

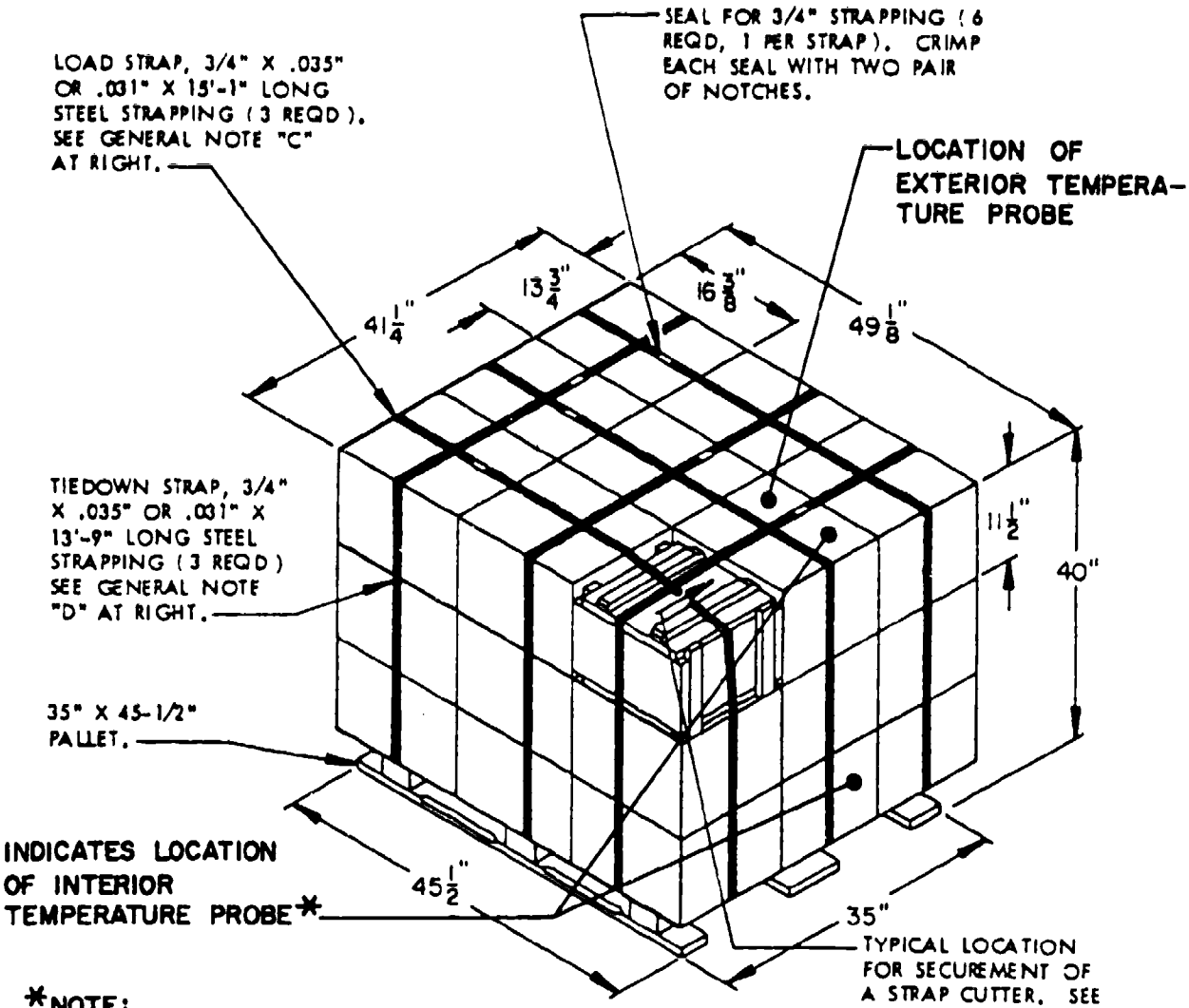

*NOTE: POSITION PROBE INSIDE FIBER CONTAINER, BUT NOT IN CONTACT WITH CARTRIDGE

PALLET UNIT

SEE GENERAL NOTE "B" AT RIGHT.

27 BOXES OF 60MM CARTRIDGE (12 PER BOX) @ 56 LBS	1,512 LBS (APPROX)
DUNNAGE	7 LBS
PALLET	65 LBS
TOTAL WEIGHT	1,584 LBS (APPROX)
CUBE	46.9 CU FT (APPROX)

DODIC: B632

DRAFTSMAN TRS	TITLE 60 MM HE MORTAR, M49A4
TEST ENGINEER	
CHIEF, VALIDATION ENGINEERING DIVISION	U.S. ARMY DEFENSE AMMUNITION CENTER AND SCHOOL, SAVANNA, ILLINOIS 61074-9639

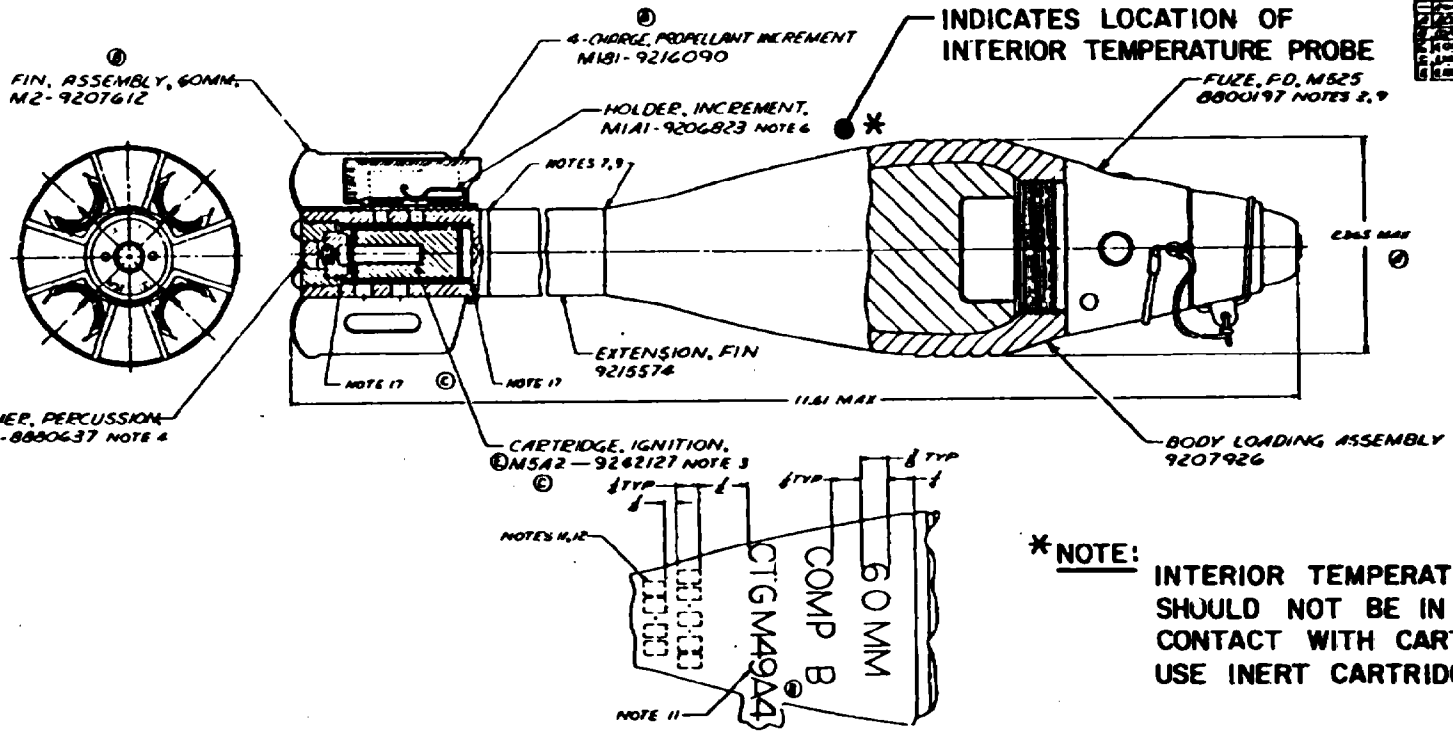

*NOTE: INTERIOR TEMPERATURE PROBE SHOULD NOT BE IN DIRECT CONTACT WITH CARTRIDGE; OR USE INERT CARTRIDGE

NOTES:-

1-SPEC MIL-A-2550 AND MIL-C-14750 APPLY.
2-COAT THREADS OF FUZE WITH CEMENT, PETTMAN, TYPE A, SPEC JAN-C-99 AND ASSEMBLE WHILE WET.
3-ASSEMBLE THE CARTRIDGE, IGNITION, M5A2-9262127 WITH RED END NEXT TO THE PRIMER, PERCUSSION, M32-8880637.
4-ASSEMBLE PRIMER, PERCUSSION, M32-8880637 INTO END OF FIN, M2-9207612 AND SECURE BY STAKING. (NOTE 5) THE PRIMER SHALL NOT PROTRUDE BEYOND THE REAR SURFACE OF THE CARTRIDGE CONTAINER OF THE FIN, M2-9207612.
5-ALTERNATIVE:-COAT THREADS OF PRIMER, PERCUSSION, M32-8880637 WITH CEMENT, PETTMAN, TYPE A, SPEC JAN-C-99 (NOTE 8) AND ASSEMBLE WITH 30 INCH POUNDS TORQUE WHILE WET.
6-ASSEMBLE HOLDER, INCREMENT, M1A1-9206823 TO FIN, M2-9207612 WITH EYELETS OF CLIP BETWEEN ADJACENT FIN.
7-COAT THREADS OF FIN, M2-9207612 AND EXTENSION, FIN-9215574 USING SEALING COMPOUND, SPEC MIL-S-3927, AND ASSEMBLE WHILE WET. (NOTE 9)
8-ALTERNATIVE MATERIAL-CEMENT DWG A9264688

9-THE FUZE AND FIN MUST WITHSTAND 100 INCH POUNDS TORQUE IN THE DIRECTION OF ASSEMBLY WITHOUT MOVEMENT WHILE THE CEMENT IS WET.
10-RETOUCH EXTERIOR SURFACE OF BODY LOADING ASSEMBLY-9207926 WHERE NECESSARY, AND PAINT OVER PREVIOUS LOADING LOT NUMBER WITH ENAMEL, OLIVE DRAB (NO. 34087), SPEC TT-E-516.
11-MARK WITH INK, STENCIL, YELLOW (NO. 33538), SPEC TT-I-558.
12-MARK LOT NUMBER AND DATE (MONTH AND YEAR) LOADED.
13-WEIGHT OF CARTRIDGE AS FIRED, WITHOUT SAFETY WIRE, PROPELLANT INCREMENT AND IGNITION CARTRIDGE IS APPROXIMATELY 3.10 LBS.
14-IF HE LOADED SHELL IS TO BE STORED PRIOR TO ASSEMBLY OF FUZE HEE PLUG, CLOSING-9207925 OVERALL LENGTH OF SHELL WITH PLUG IS 9.35 MAX.
15-THIS ASSEMBLY MUST FREELY ENTER THE ALIGNMENT GAGE.
16-FOR REHOOTION PURPOSES TNT LOADING IS ACCEPTABLE. MARKING OF REHOOTED CTG TO REFLECT TNT FILLER.

17-APPLY A BEAD OF ADHESIVE-SEALANT DWG A9333455 AT POINT OF CONTACT OF ROLLED CRIMP OF YELLOW END OF IGNITION CARTRIDGE, M5A2-9262127 AND BASE OF THE CARTRIDGE HOUSING CAVITY OF FIN ASSEMBLY 60 MM, M2-9207612. INSERT IGNITION CARTRIDGE AND APPLY SECOND BEAD ON ROLLED CRIMP OF RED END OF IGNITION CARTRIDGE (OR CLOSE TO THE CRIMP AS GUIDED BY THE WALLS OF CAVITY) PRIOR TO SEATING THE PRIMER, PERCUSSION M32-8880637. THE BEAD SIZE IS TO BE APPROX 1/16 INCH DIA.

DODIC: B632

FOR ASSOCIATED LISTS SEE-9220179 PART NO. 9220179

27 SEP 1966		CARTRIDGE, 60MM, HE, M49A4 ASSEMBLY	
		6	9220179

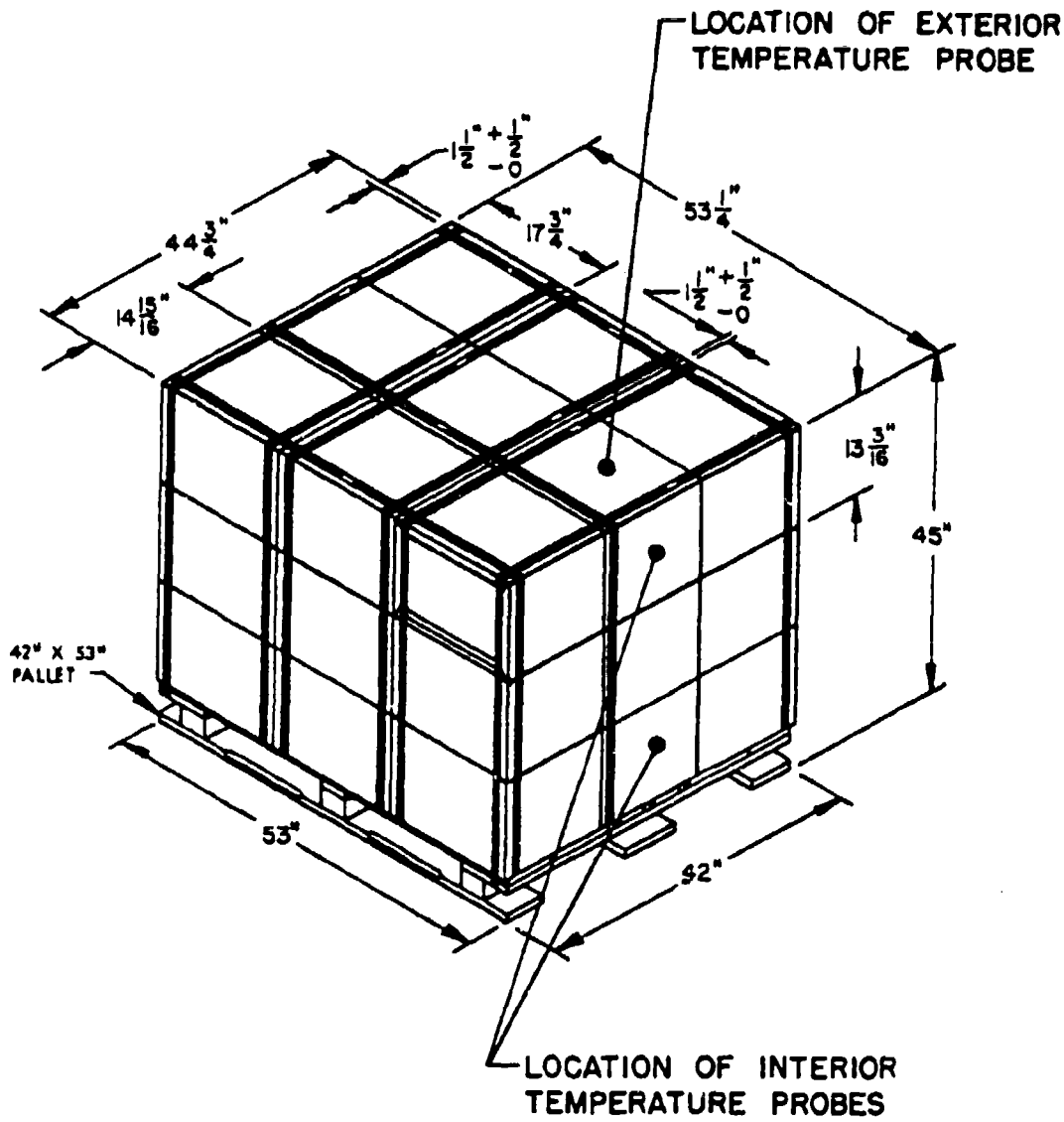

DODIC: B642

DRAFTSMAN TRS	TITLE CARTRIDGE, 60 MM HE, M720
TEST ENGINEER	
CHIEF, VALIDATION ENGINEERING DIVISION	U.S. ARMY DEFENSE AMMUNITION CENTER AND SCHOOL, SAVANNA, ILLINOIS 61074-9639

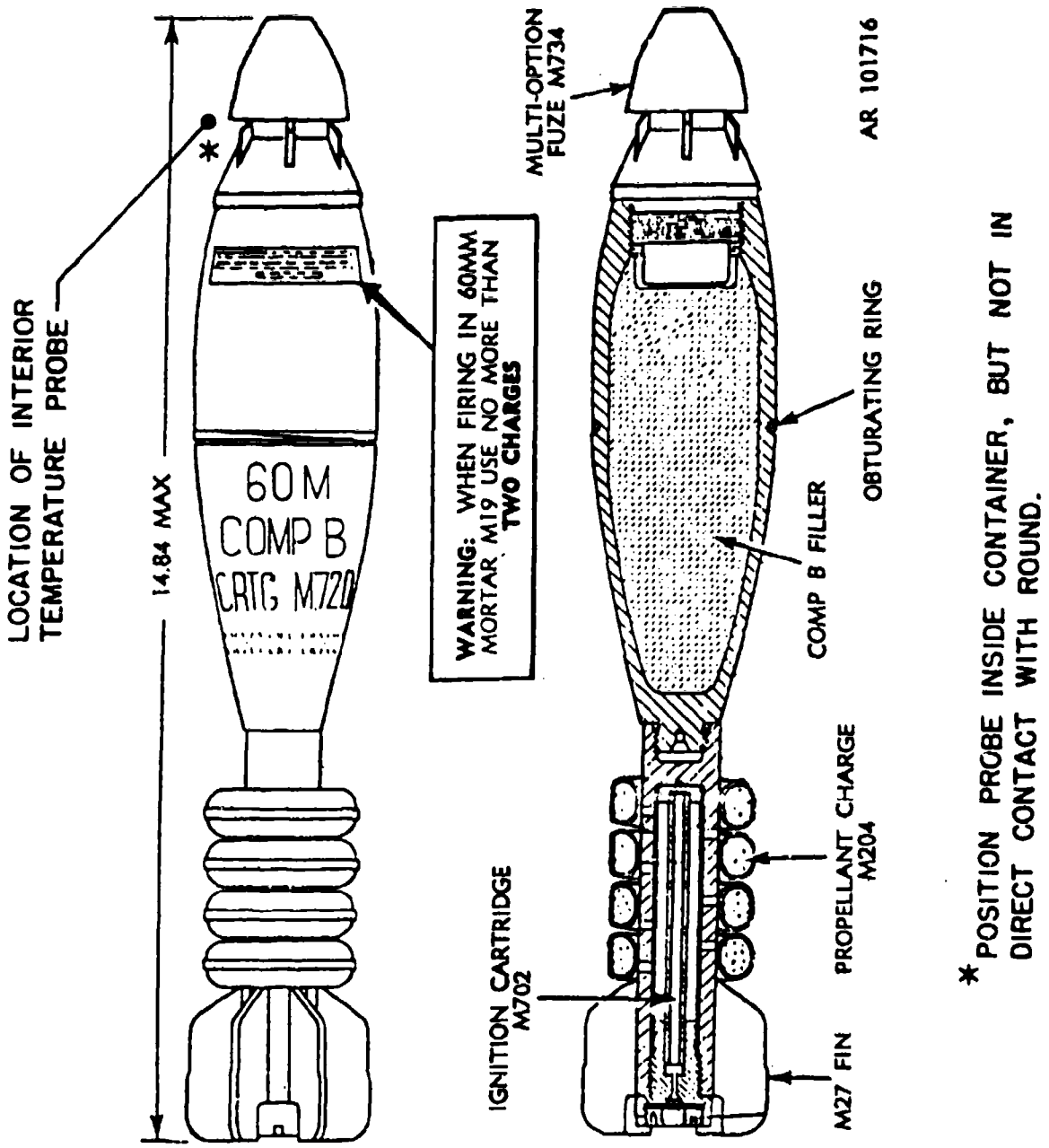

DODIC: B642

DRAFTSMAN TRS	TITLE CARTRIDGE, 60 MM HE, M720
TEST ENGINEER	
CHIEF, VALIDATION ENGINEERING DIVISION	U.S. ARMY DEFENSE AMMUNITION CENTER AND SCHOOL, SAVANNA, ILLINOIS 61074-9639

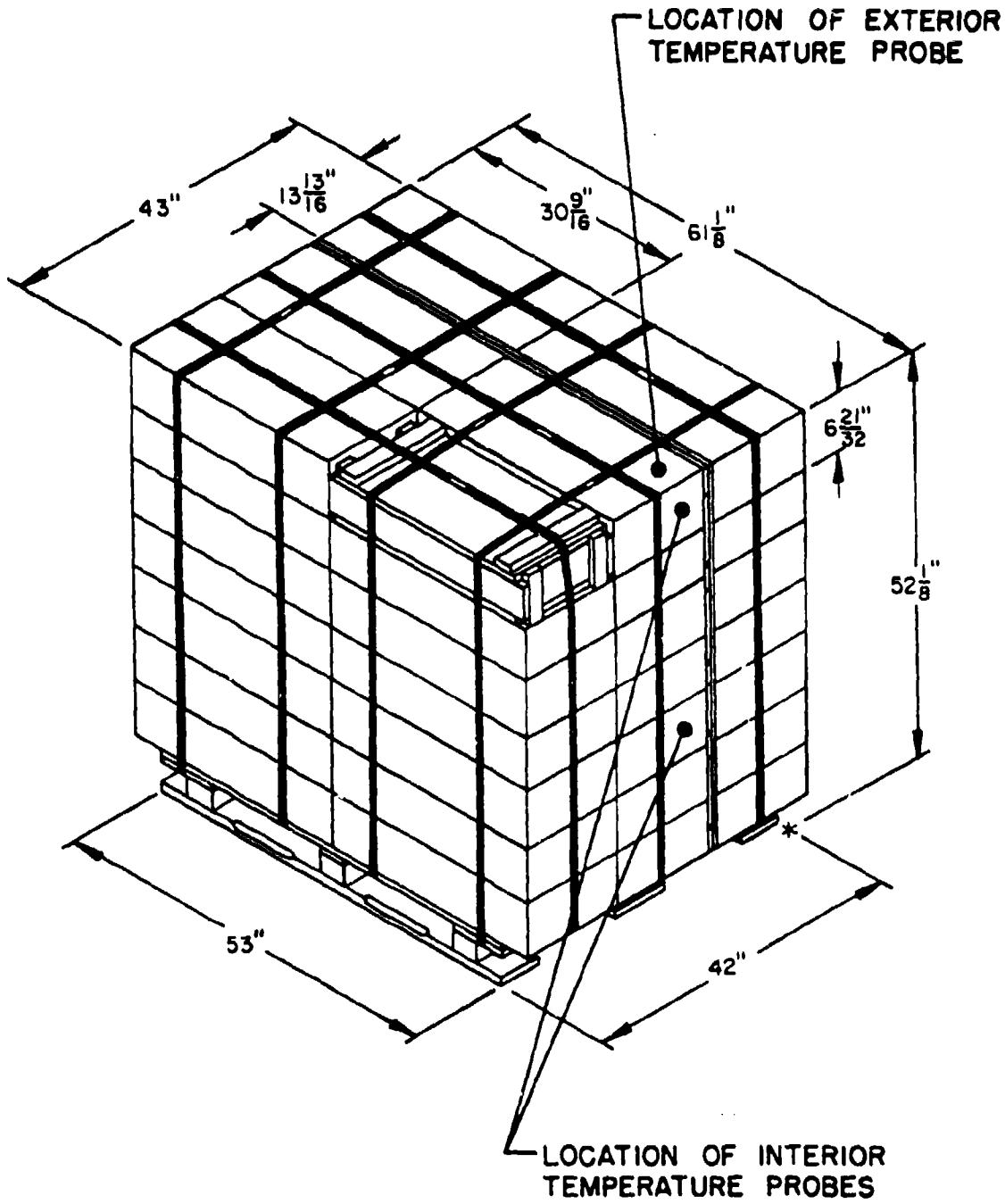

DODIC: C226

DRAFTSMAN TRS	TITLE CARTRIDGE, 81 MM ILLUM. M301 SERIES
TEST ENGINEER	
CHIEF, VALIDATION ENGINEERING DIVISION	U.S. ARMY DEFENSE AMMUNITION CENTER AND SCHOOL, SAVANNA, ILLINOIS 61074-9639

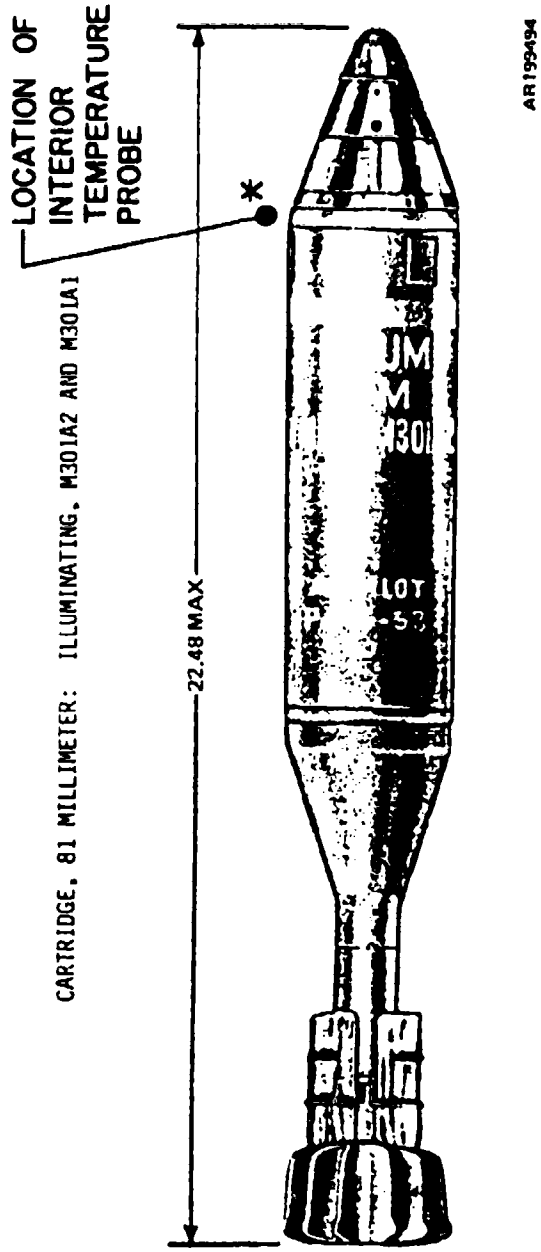

CARTRIDGE, 81 MILLIMETER: ILLUMINATING, M301A2 AND M301A1

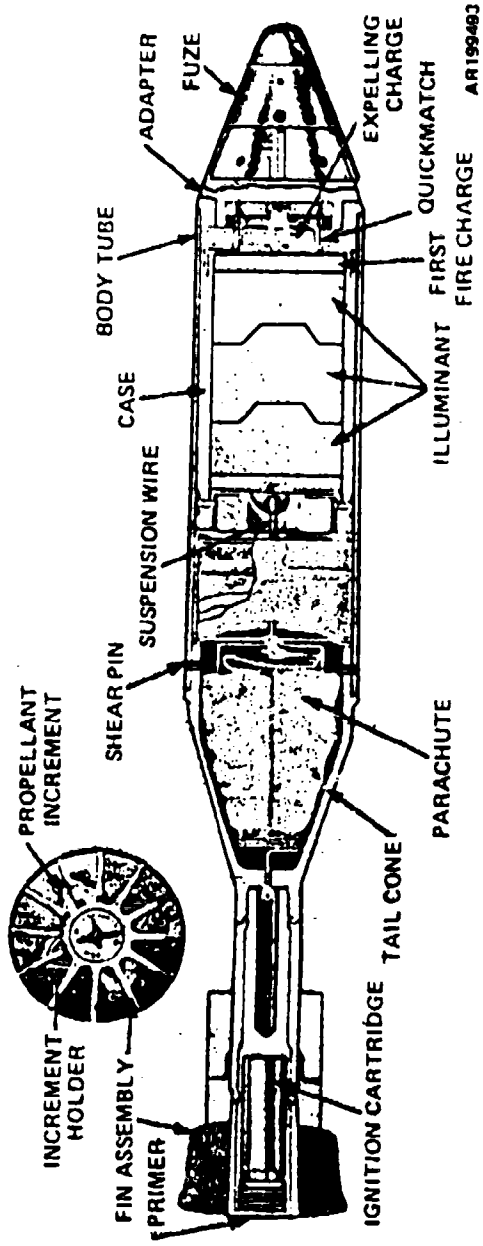

*POSITION PROBE INSIDE CONTAINER, BUT NOT IN DIRECT CONTACT WITH ROUND.

DODIC: C226

DRAFTSMAN TRS	TITLE CARTRIDGE, 81 MM ILLUM. M301 SERIES
TEST ENGINEER	
CHIEF, VALIDATION ENGINEERING DIVISION	U.S. ARMY DEFENSE AMMUNITION CENTER AND SCHOOL, SAVANNA, ILLINOIS 61074-9639

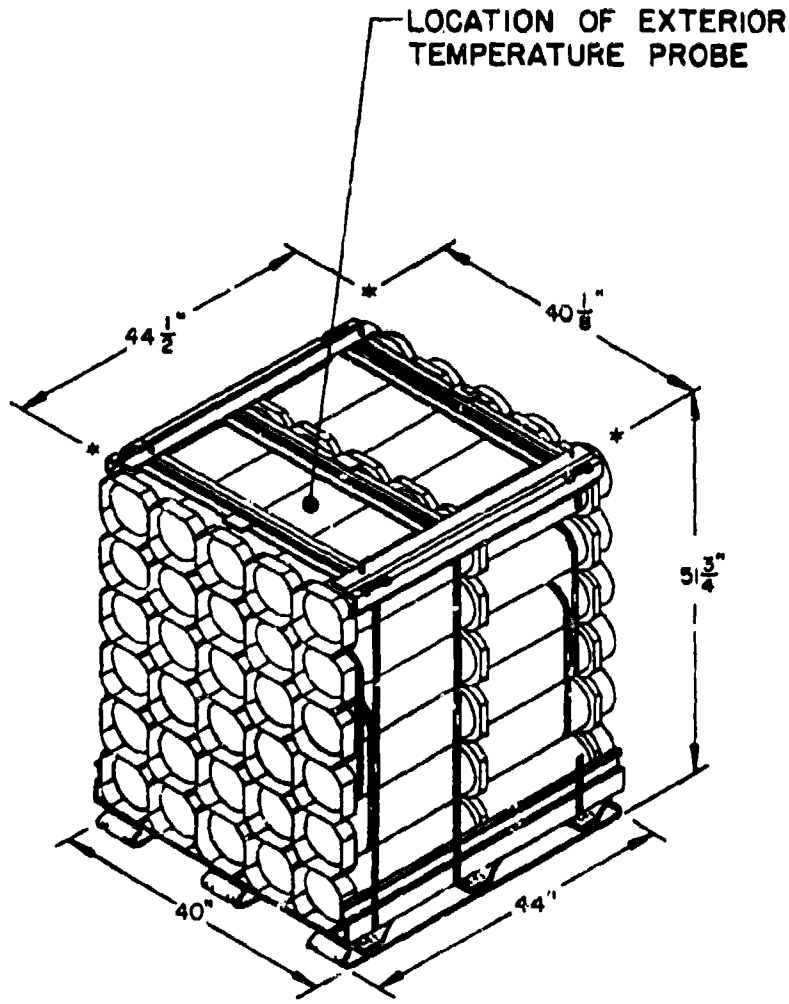

DODIC: C380

DRAFTSMAN TRS	TITLE CARTRIDGE, 120 MM: APFSDS-T, M829A1
TEST ENGINEER	
CHIEF, VALIDATION ENGINEERING DIVISION	U.S. ARMY DEFENSE AMMUNITION CENTER AND SCHOOL, SAVANNA, ILLINOIS 61074-9639

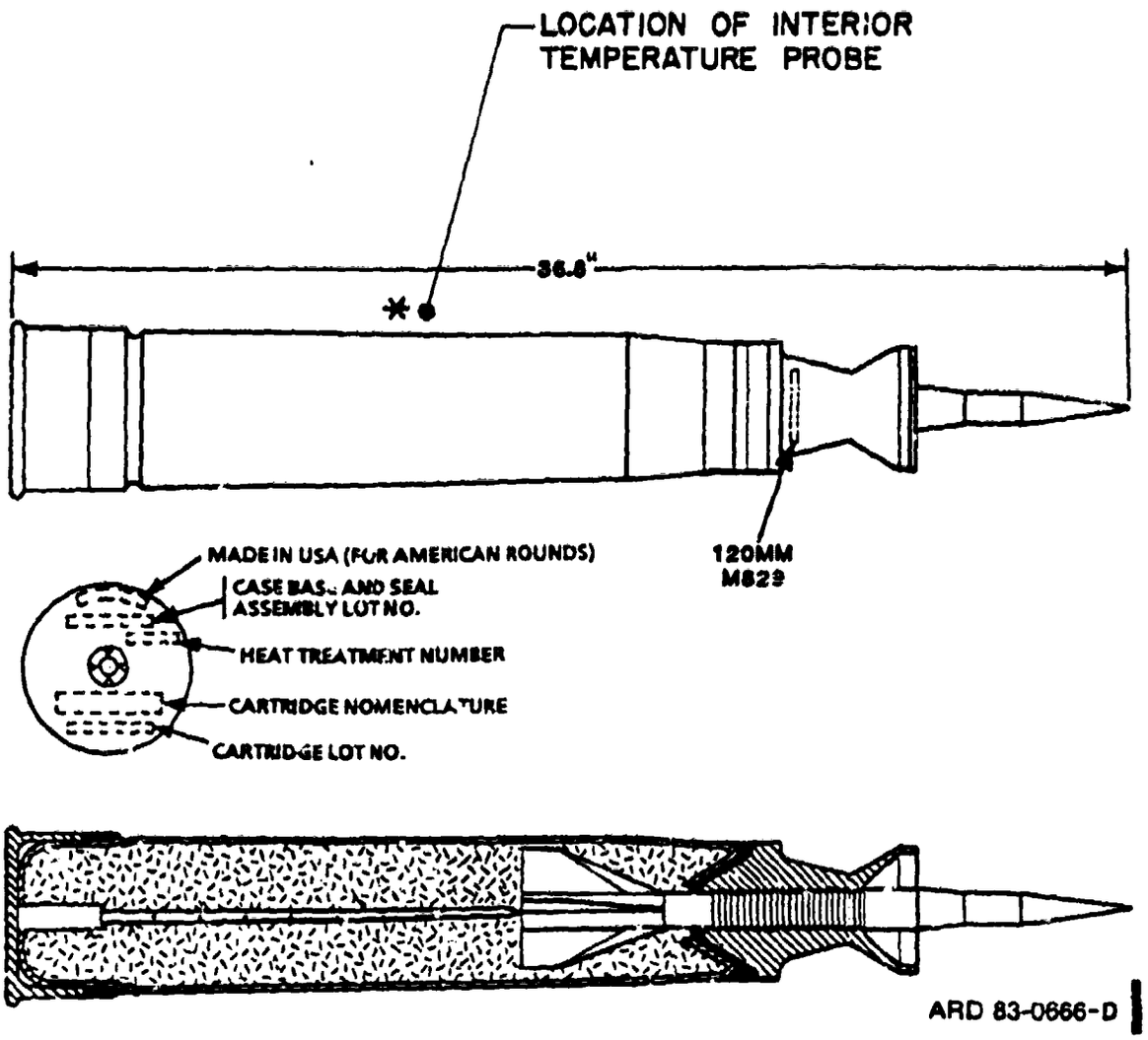

*POSITION PROBE INSIDE CONTAINER, BUT NOT IN DIRECT CONTACT WITH ROUND, OR USE INERT CARTRIDGE.

DODIC: C380

DRAFTSMAN TRS	TITLE CARTRIDGE, 120 MM: APFSDS-T, M829A1
TEST ENGINEER	
CHIEF, VALIDATION ENGINEERING DIVISION	U.S. ARMY DEFENSE AMMUNITION CENTER AND SCHOOL, SAVANNA, ILLINOIS 61074-9639

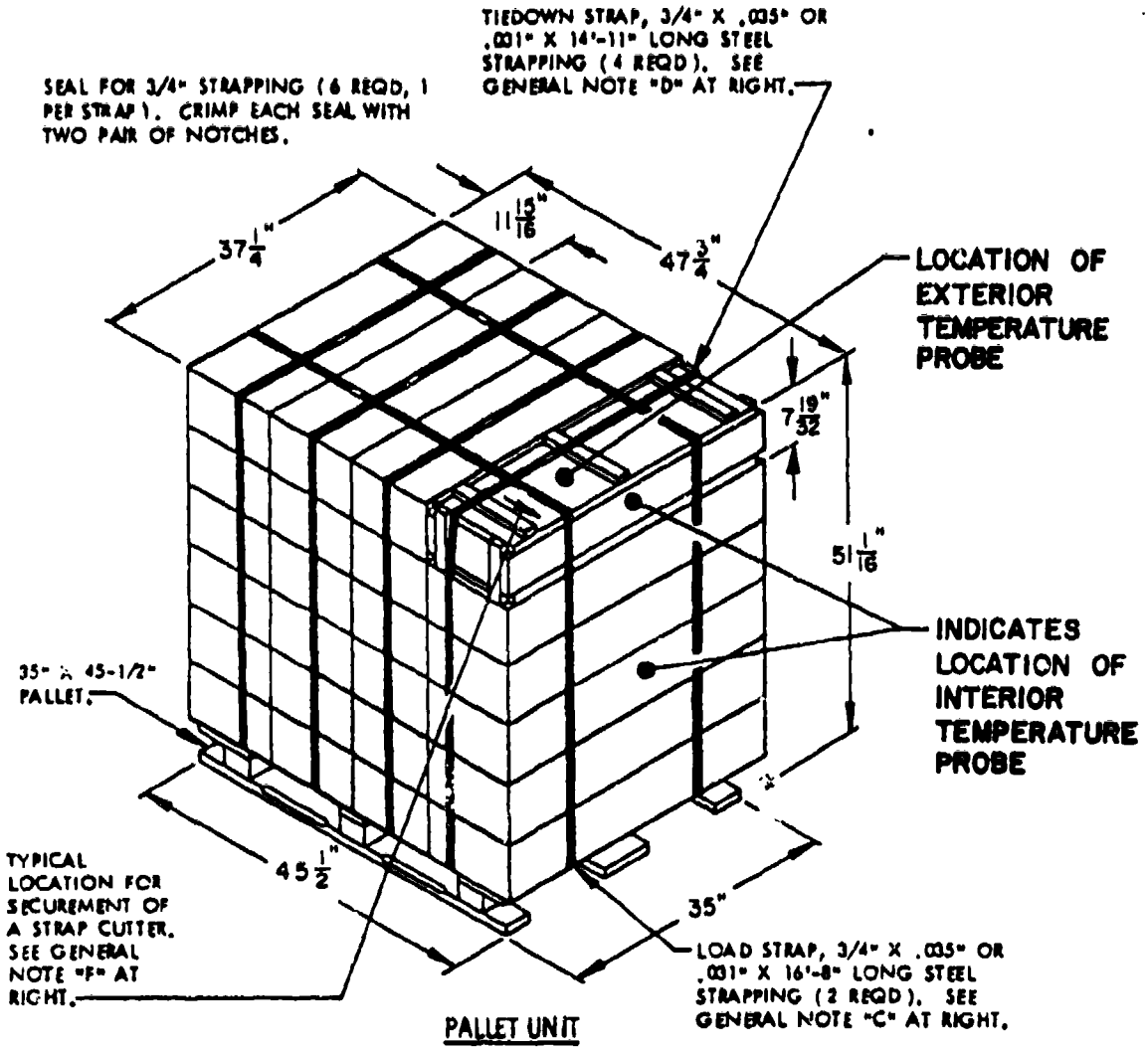

PALLET UNIT

SEE GENERAL NOTE "B" AT RIGHT.

24 BOXES OF 105MM CARTRIDGES (2 PER BOX) @ 105 LBS	2,520 LBS (APPROX)
DUNNAGE	7 LBS
PALLET	65 LBS
TOTAL WEIGHT	2,592 LBS (APPROX)
CUBE	52.6 CU FT (APPROX)

DODIC: C445

DRAFTSMAN TRS	TITLE CARTRIDGE, 105 MM HE M1 W/O FUZE
TEST ENGINEER	
CHIEF, VALIDATION ENGINEERING DIVISION	U.S. ARMY DEFENSE AMMUNITION CENTER AND SCHOOL, SAVANNA, ILLINOIS 61074-9639

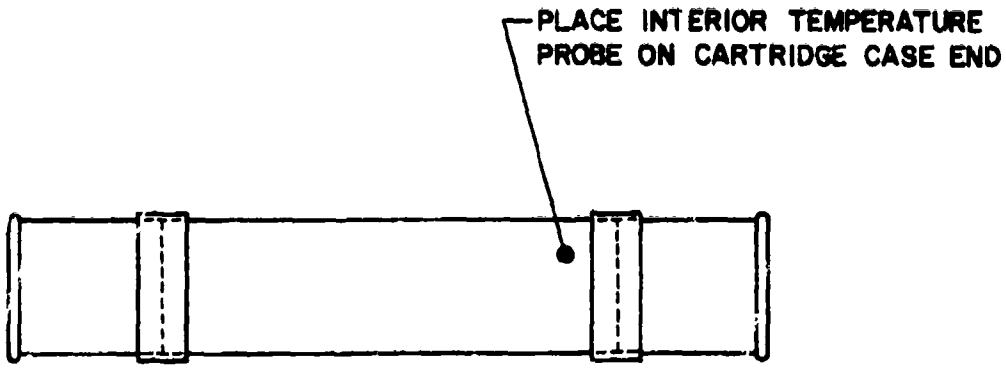

DOUBLE END OPENING CONTAINER

DODIC: C445

DRAFTSMAN TRS	TITLE CARTRIDGE, 105 MM HE M1 W/O FUZE
TEST ENGINEER	
CHIEF, VALIDATION ENGINEERING DIVISION	U.S. ARMY DEFENSE AMMUNITION CENTER AND SCHOOL, SAVANNA, ILLINOIS 61074-9639

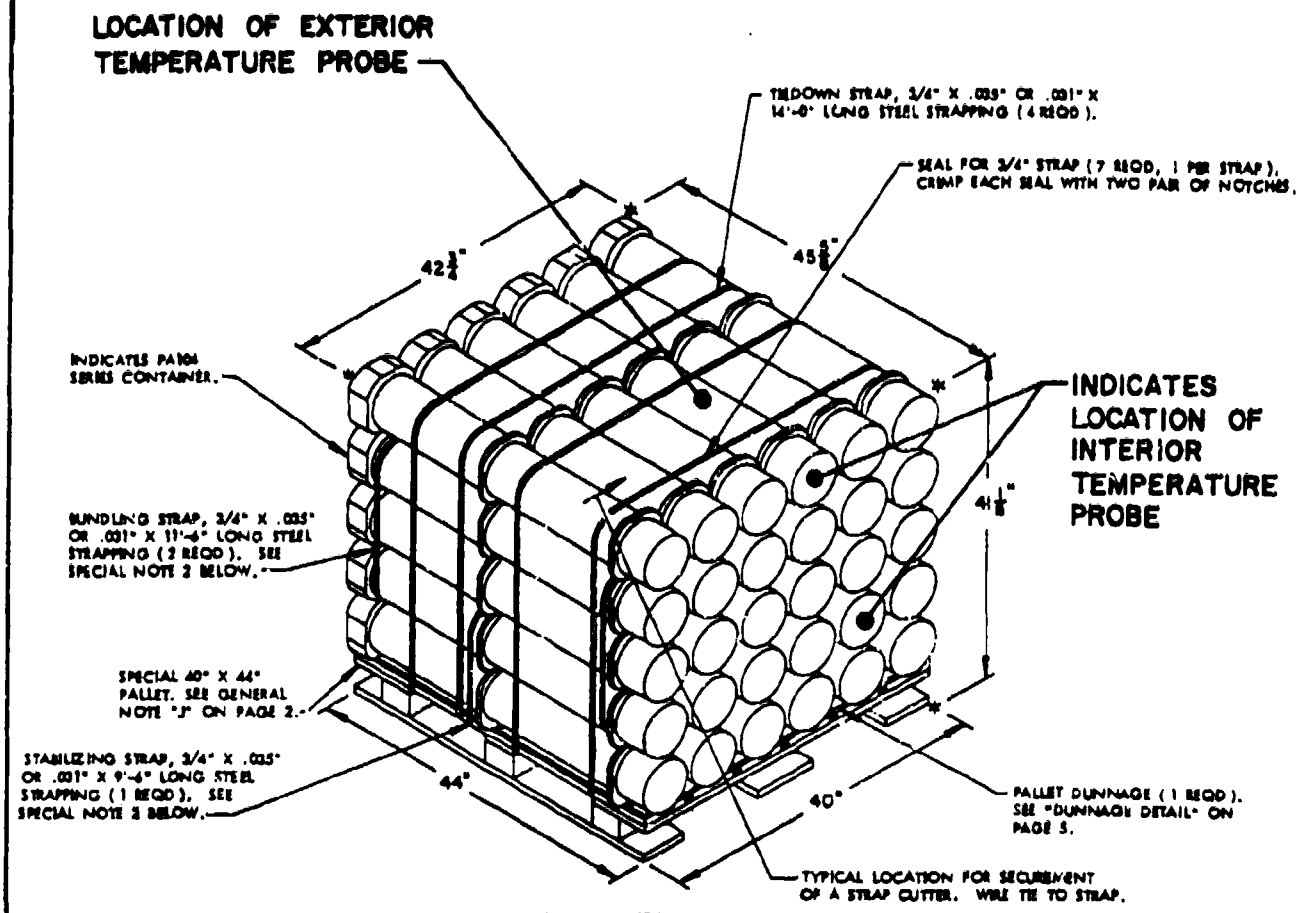

ISOMETRIC VIEW

DODIC: C508

DRAFTSMAN TRS	TITLE CARTRIDGE, 105 MM HEAT-T M456A2
TEST ENGINEER	
CHIEF, VALIDATION ENGINEERING DIVISION	U.S. ARMY DEFENSE AMMUNITION CENTER AND SCHOOL, SAVANNA, ILLINOIS 61074-9639

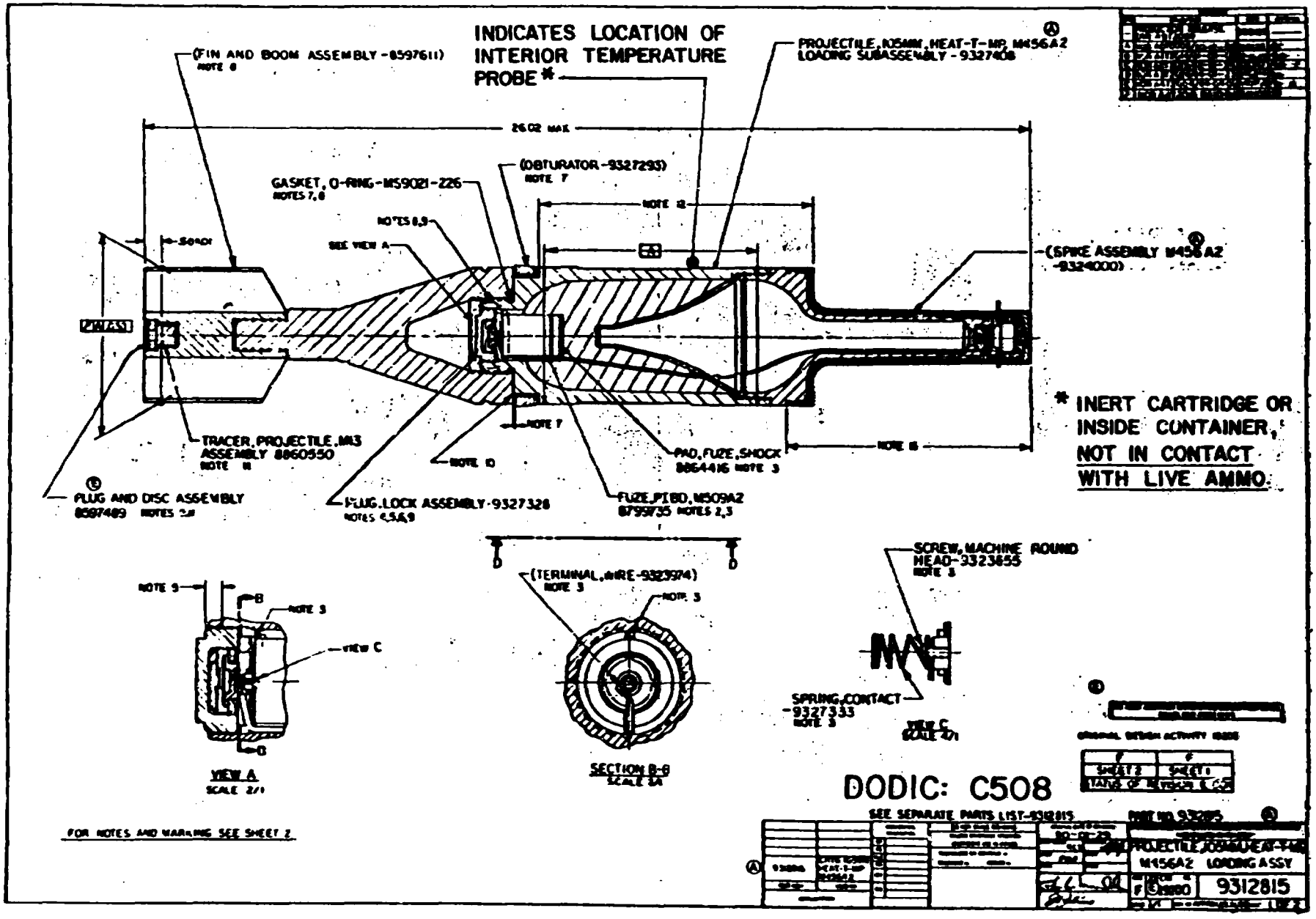
INDICATES LOCATION OF INTERIOR TEMPERATURE PROBE *
(FIN AND BOOM ASSEMBLY -8597611)
NOTE 8
PROJECTILE, 105MM, HEAT-T-MP, M456A2
LOADING SUBASSEMBLY - 9327408
26.02 MAX
(OBTURATOR-9327293)
NOTE 7
GASKET, O-RING-MS9021-226
NOTES 7,8
NOTES 8,9
SEE VIEW A
NOTE 12
(SPIKE ASSEMBLY M456A2
-9324000)
TRACER, PROJECTILE, M3
ASSEMBLY 8860550
NOTE 11
NOTE 10
NOTE 7
PAD, FUZE, SHOCK
8864416 NOTE 3
NOTE 15
PLUG AND DISC ASSEMBLY
8597489 NOTES 5,8
PLUG, LOCK ASSEMBLY-9327328
NOTES 4,5,6,9
FUZE, PIBD, M509A2
8799735 NOTES 2,3
* INERT CARTRIDGE OR INSIDE CONTAINER, NOT IN CONTACT WITH LIVE AMMO.
(TERMINAL, WIRE-9323974)
NOTE 3
NOTE 3
SCREW, MACHINE ROUND HEAD-9323655
NOTE 3
NOTE 9
NOTE 3
VIEW C
SPRING, CONTACT
-9327333
NOTE 3
VIEW C
SCALE 2/1
VIEW A
SCALE 2/1
SECTION B-B
SCALE 2/1
DODIC: C508
SEE SEPARATE PARTS LIST-9312815
FOR NOTES AND MARKING SEE SHEET 2
PROJECTILE, 105MM, HEAT-T-MP
M456A2 LOADING ASSY
9312815

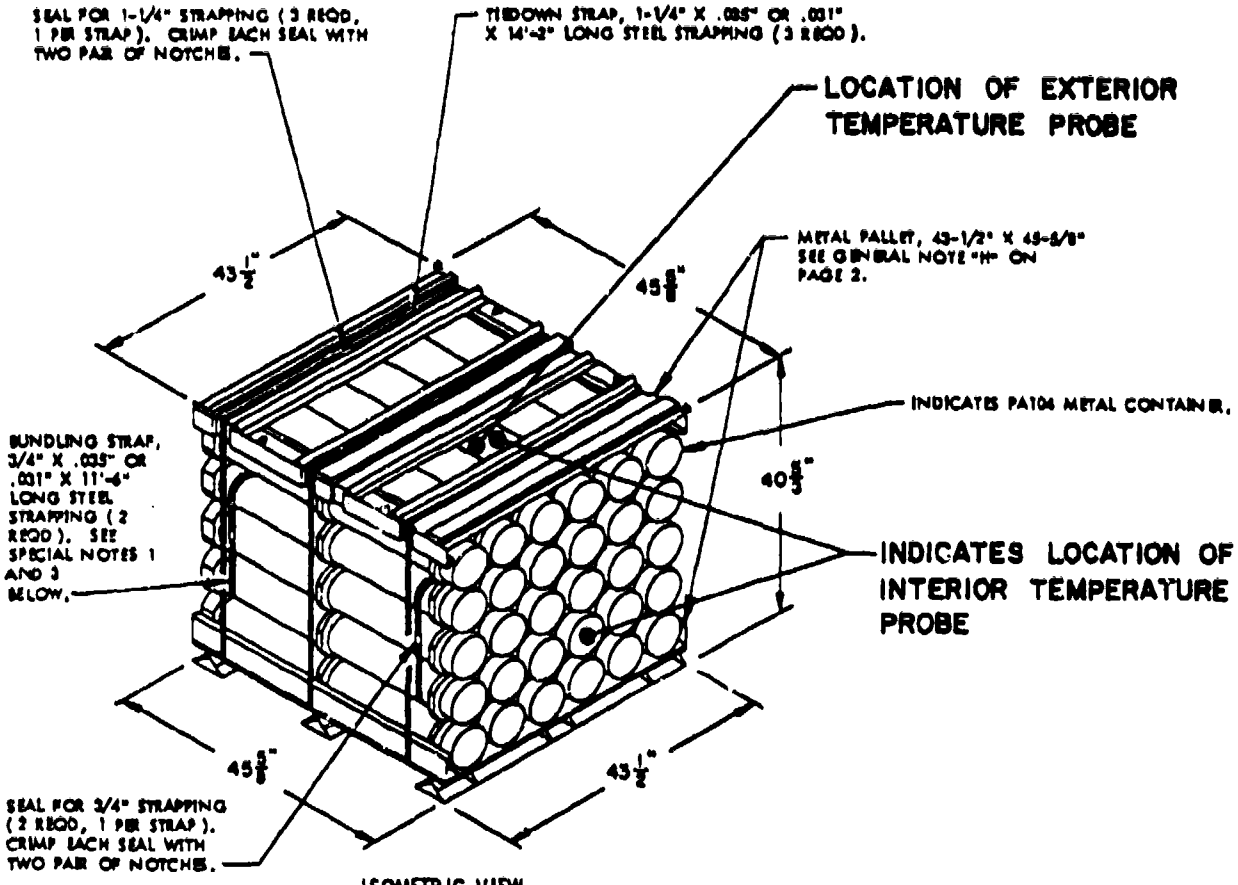

ISOMETRIC VIEW

SEE GENERAL NOTE "B" ON PAGE 2.

UNIT DATA:

CUBE	46.7 CUBIC FEET (APPROX)	
CONTAINER	30 EA @ 70 LBS	2,100 LBS (APPROX)
DUNNAGE		8 LBS
PALLET		175 LBS
TOTAL WEIGHT		2,283 LBS (APPROX)

DODIC: C523

DRAFTSMAN TRS	TITLE 105 MM CARTRIDGE, APFSDS-T XM774
TEST ENGINEER	
CHIEF, VALIDATION ENGINEERING DIVISION	U.S. ARMY DEFENSE AMMUNITION CENTER AND SCHOOL, SAVANNA, ILLINOIS 61074-9639

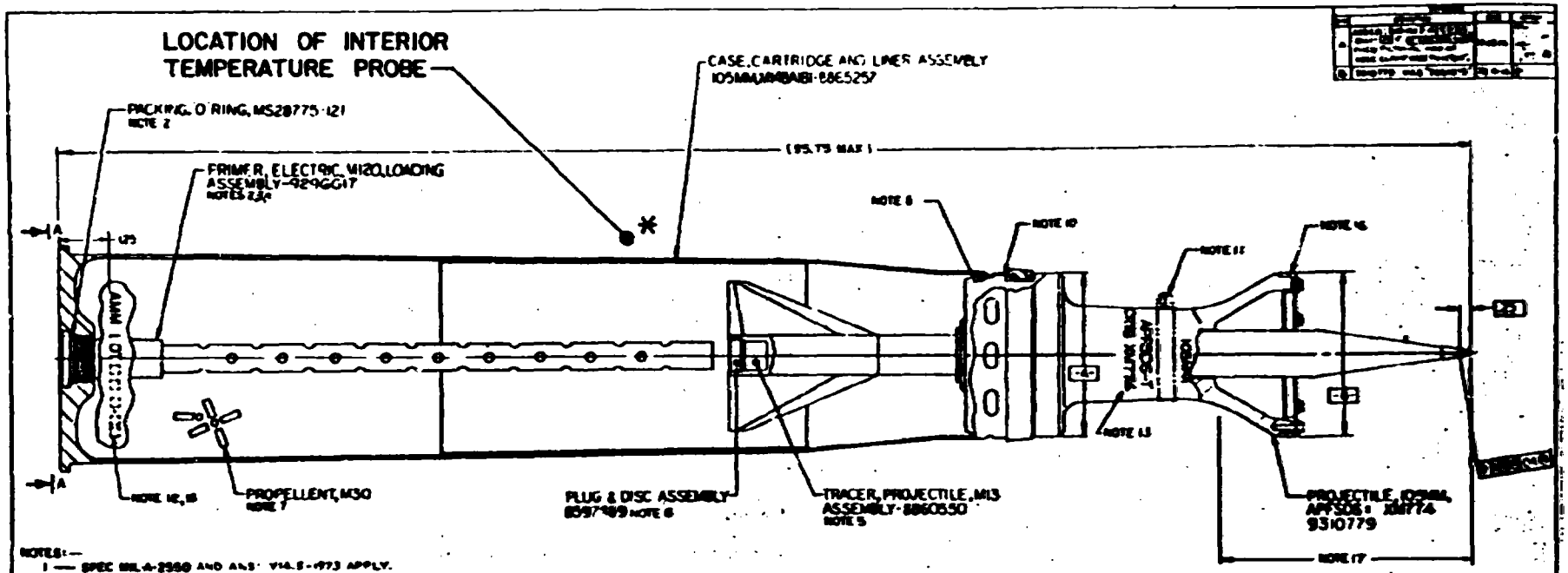

NOTES:—

1 — SPEC MIL-A-2550 AND ANSI Y14.5-1973 APPLY.
2 — ASSEMBLE PACKING TO PRIMER.
3 — ASSEMBLE PRIMER ASSY TO CARTRIDGE CASE ASSY WITH 100+20 IN-LB. TORQUE AND STAKE IN TWO PLACES 180° APART TO WITHSTAND 100 FT-LB. MIN DISASSEMBLY TORQUE. PRIMER ASSEMBLY SHALL BE FLUSH TO .053 IN BELOW FLUSH WITH REAR FACE OF CASE.
4 — AFTER ASSEMBLY OF PRIMER TO CASE, TEST FOR ELECTRICAL CONTINUITY BETWEEN PRIMER ELECTRODE AND CARTRIDGE CASE IN ACCORDANCE WITH SPEC GAP-GAA-735. RESISTANCE SHALL BE 0.6 TO 1.0 OHMS.
5 — PRIOR TO ASSEMBLING PROJECTILE TO CARTRIDGE CASE, INSERT TRACER (MOUTH OF TRACER FACING OUT) IN CAVITY OF PIN AS SHOWN.
6 — APPLY ADHESIVE, TYPE I, OR 2, SPEC MMM-A-1105, ON [illegible] OF PLUG & DISC ASSEMBLY AND ASSEMBLE TO PIN WHILE THE ADHESIVE IS IN AN UNCURED STATE WITH A TORQUE OF 100+20 IN-LB. REMOVE ALL EXCESS ADHESIVE FROM END OF PLUG AFTER ASSEMBLY.
7 — LOAD WITH APPROX 12 LB 9 OZ. OF PROPELLANT, SPEC MIL-P-[illegible].
8 — COAT INTERIOR SURFACE OF CASE AT CRIMPING AREA INDICATED WITH ADHESIVE, TYPE 3, SPEC MMM-A-1127 AND INSERT PROJECTILE IN CARTRIDGE CASE WHILE CEMENT IS WET. A 23 LB MAX PEAK LOAD SHOULD BE EXERTED AXIALLY BETWEEN CASE AND PROJECTILE WHEN CRIMPING (NOTES 9 AND 10) CASE TO PROJECTILE. NO CEMENT PERMITTED ON OR UNDER BAND.
9 — CRIMP CASE TO PROJECTILE WHILE CEMENT IS WET TO MEET 2000+2000 LB. BULLET PULL. (NOTE 10)
NOTE: 9 EQUALLY SPACED STAB CRIMPS 5/8 IN LONG.
10 — MAXIMUM GAP OF .020 IS PERMITTED BETWEEN FRONT FACE OF CASE AND REAR FACE OF BAND.
11 — AFTER CRIMPING AND BEFORE MARKING REMOVE NOSE CLAMP AND PAINT EXPOSED AREA LEFT BY THE NOSE CLAMP WITH FINISH NO. 30.1, BLACK, COLOR NO. 37038 OF MIL-STD-171.
12 — MARKING SHOWN IS BY LOADER. PREVIOUS MARKING NOT SHOWN REMAINS.
13 — MARK WITH INK, STENCIL, SPECT P-I-1795, TYPE I, COLOR WHITE, NO. 37875 IN .25 HIGH GOTHIC CHARACTERS IN APPROXIMATE POSITION AS SHOWN.

14 — RETOUCH EXTERIOR SURFACES OF PROJECTILE ASSEMBLY WHERE PREVIOUS COATING IS DAMAGED WITH FINISH NO. 30.1, BLACK, COLOR NO. 37038 OF MIL-STD-171. AFTER RETOUCHING, BOURRELET DIA SHALL NOT EXCEED 4.132.
15 — ASSEMBLY MUST FREELY ENTER PROFILE AND ALIGNMENT GAGE.
16 — AFTER CRIMPING AND REMOVAL OF NOSE CLAMP THE THREE SHEAR AREAS ON FRONT BOURRELET SHOULD NOT BE CRACKED.
17 — THROUGHOUT THE ENTIRE LOADING OPERATION NO PRESSURE IS TO BE APPLIED OVER AREA INDICATED.

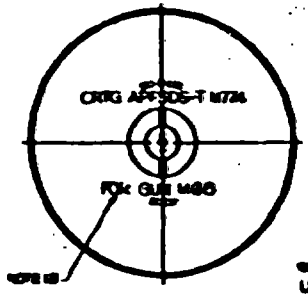

VIEW A-A

* POSITION INSIDE CONTAINER, NOT IN CONTACT WITH CARTRIDGE; OR USE INERT CARTRIDGE

DODIC: C523

UNCLASSIFIED

CONFIDENTIAL

PART NO. 9324660

CARTRIDGE, 105MM, APFSDS-T: XM774

9 | MODIFIED | T | 9324660

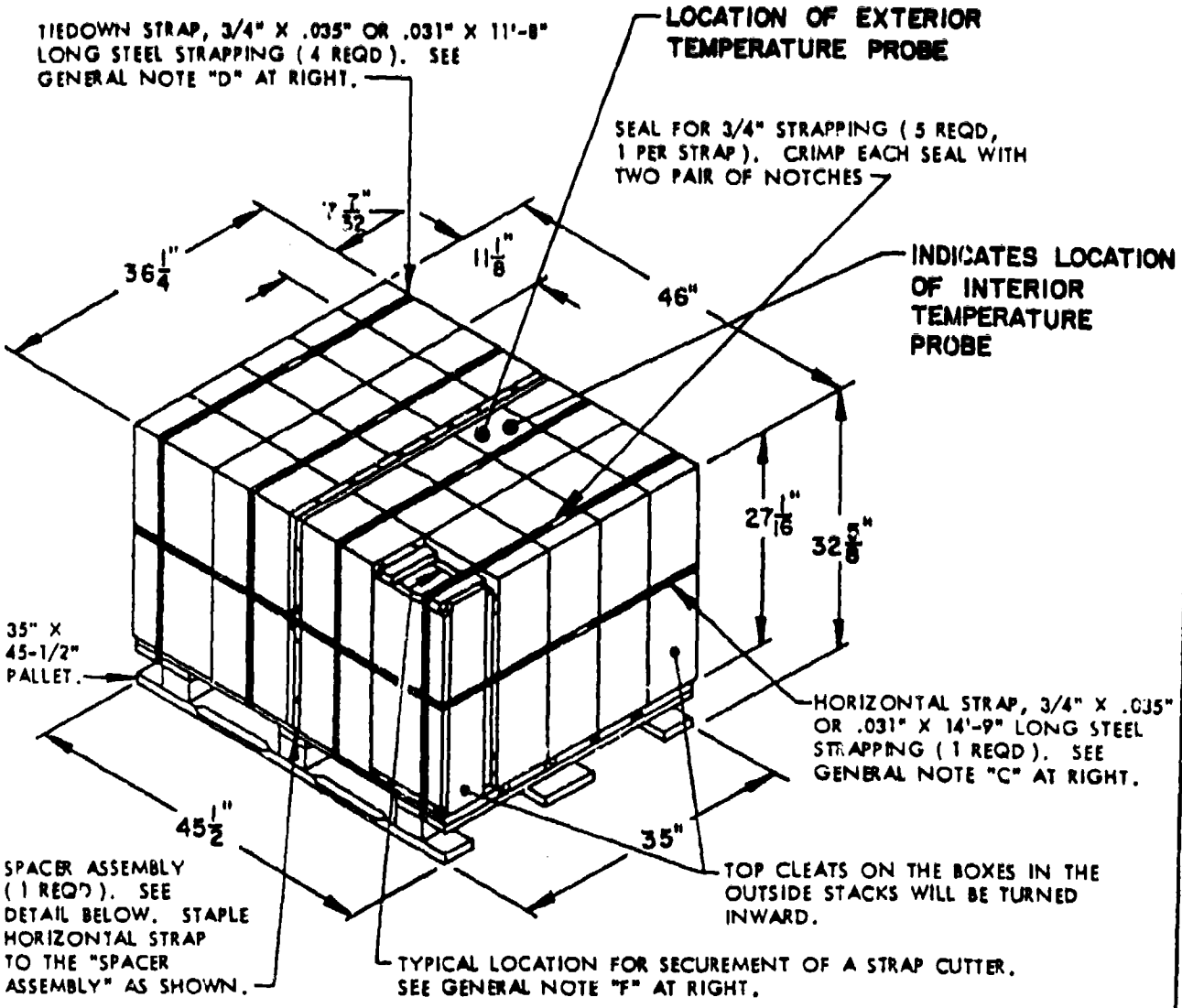

PALLET UNIT

SEE GENERAL NOTE "B" AT RIGHT.

20 BOXES OF 4.2" CARTRIDGES (2 PER BOX) @ 70 LBS	1,400 LBS (APPROX)
DUNNAGE	19 LBS
PALLET	65 LBS
TOTAL WEIGHT	1,484 LBS (APPROX)
CUBE	31.5 CU FT (APPROX)

DODIC: C708

DRAFTSMAN TRS	TITLE CARTRIDGE, 4.2 INCH SMOKE WP M328A1 W/PD FUZE
TEST ENGINEER	
CHIEF, VALIDATION ENGINEERING DIVISION	U.S. ARMY DEFENSE AMMUNITION CENTER AND SCHOOL, SAVANNA, ILLINOIS 61074-9639

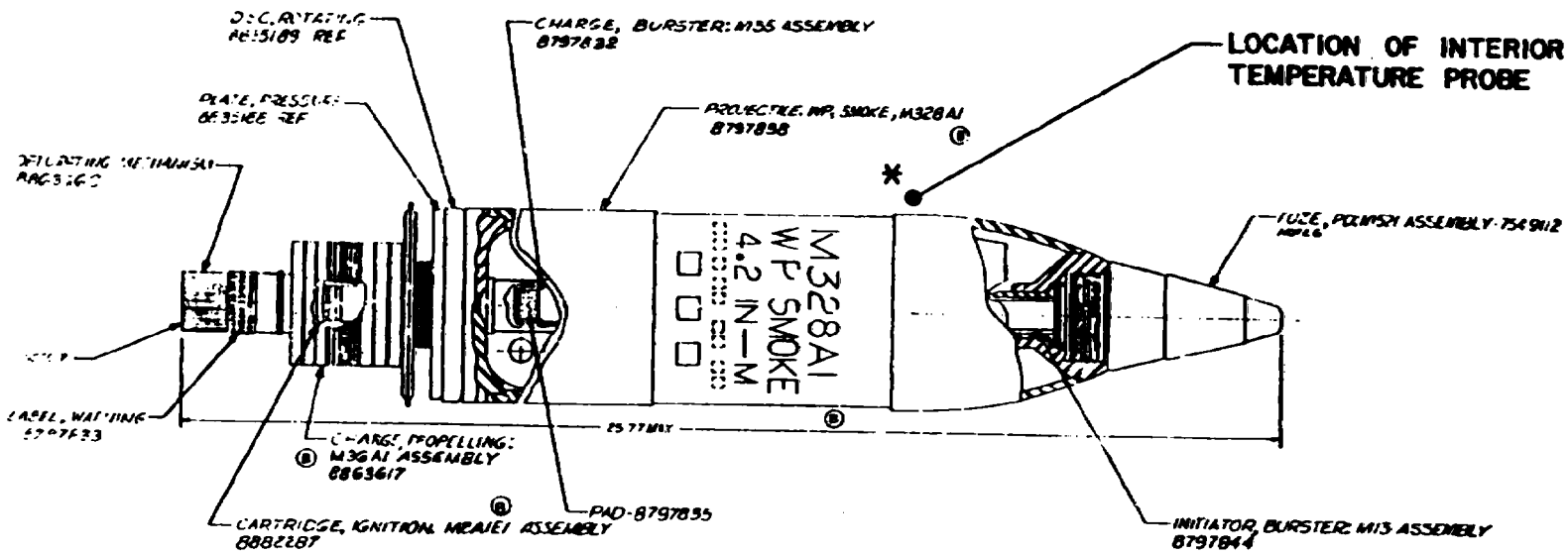

* POSITION INSIDE FIBER CONTAINER, NOT IN CONTACT WITH CARTRIDGE; OR USE INERT CARTRIDGE

NOTES

(B) 1. SPEC MIL-A-8930 AND MIL-C-4681 APPLY

2. SECURE ROTATING DISC-8835189 AND CARTRIDGE CONTAINER-8835:83 TO LOCKLINE WITH SUFFICIENT TORQUE TO WITHSTAND A DISASSEMBLY TORQUE OF 150 INCH POUNDS. ASSEMBLE PRESSURE PLATE-8835188 AND PRESSURE PLATE NUT-8835186 HAND TIGHT AND SECURE NUT TO CARTRIDGE CONTAINER BY STAKING IN TWO PLACES 180 APART.

3. ASSEMBLE STIFFENER ALT ASSEMBLY-8863616 TO CARTRIDGE CONTAINER BY APPLYING PETTMAN CEMENT, SPEC MIL-C-99 TO THREADS AND SECURE WITH SUFFICIENT TORQUE TO WITHSTAND A DISASSEMBLY TORQUE OF 150 INCH POUNDS.

4. ASSEMBLE CARTRIDGE CONTAINER EXTENSION-8863664 TO STRIKER NUT ASSEMBLY-8863662 HAND TIGHT MAKING SURE PIN-8835665 IS IN POSITION

5. ASSEMBLY MUST FREELY ENTER PROFILE AND ALIGNMENT GAGE.

6. SECURE FUZE FIRMLY TO SHELL AND STAKE IN AT LEAST 2 SHELL STAKING NOTCHES SO THE FUZE WILL WITHSTAND 300 INCH POUND TORQUE IN A COUNTER CLOCKWISE DIRECTION WITHOUT LOOSENING.

7. ASSEMBLE HAND TIGHT.

8. ASSEMBLE PROPELLANT HOLDERS-8835:82 OVER END OF CARTRIDGE CONTAINER AND CARTRIDGE CONTAINER EXTENSION ASSEMBLY AT THE TIME OF ASSEMBLY OF THE PROPELLANT.

DODIC: C708

FOR LIST OF PARTS SEE ENGINEERING PARTS LIST-8797829

DRAWING TITLE NO. 8797829

CARTRIDGE (B) 4.2 INCH WP SMOKE, M328A1

8797820

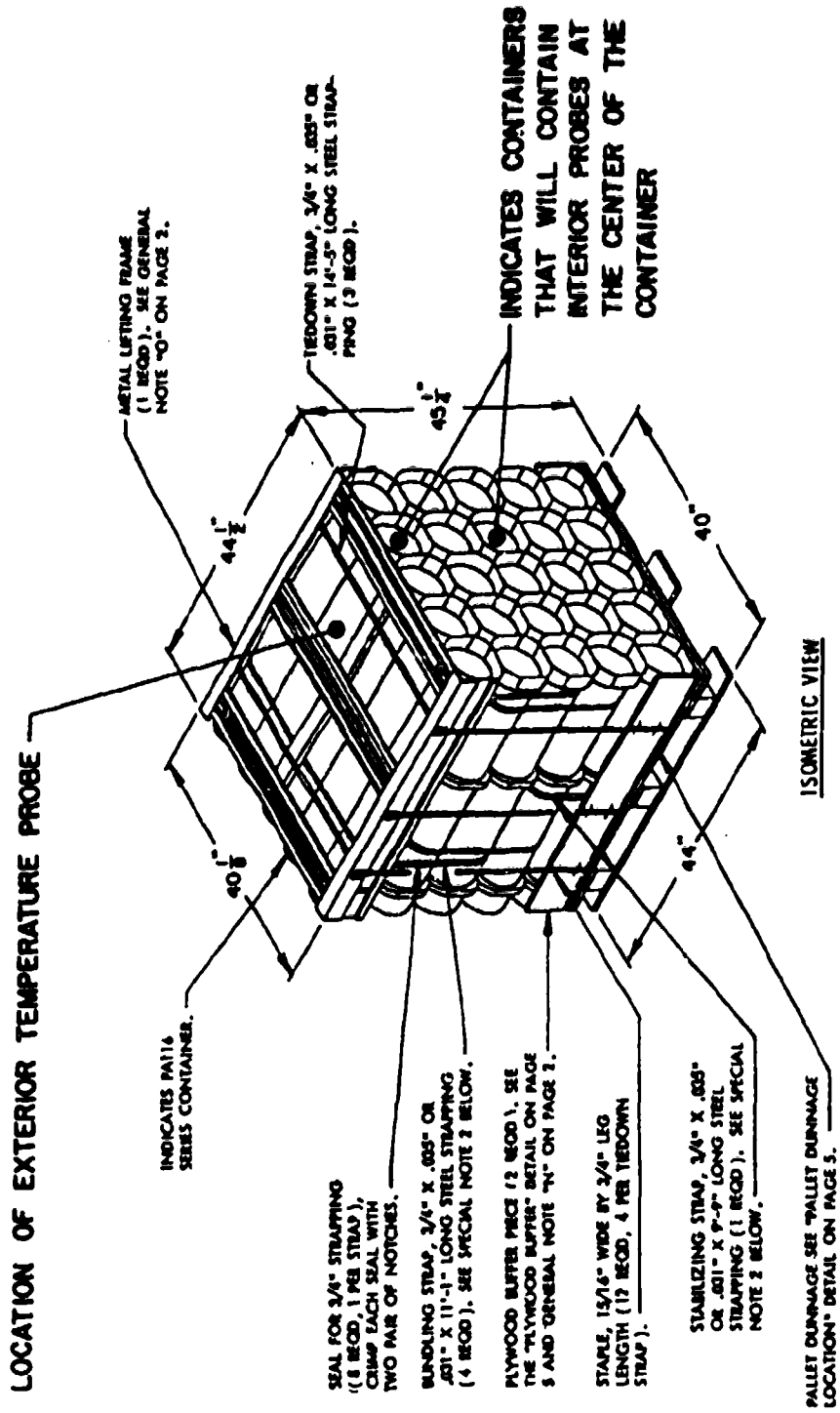

DODIC: C786

DRAFTSMAN TRS	TITLE CARTRIDGE, 120 MM APFSDS-T M829
TEST ENGINEER	
CHIEF, VALIDATION ENGINEERING DIVISION	U.S. ARMY DEFENSE AMMUNITION CENTER AND SCHOOL, SAVANNA, ILLINOIS 61074-9639

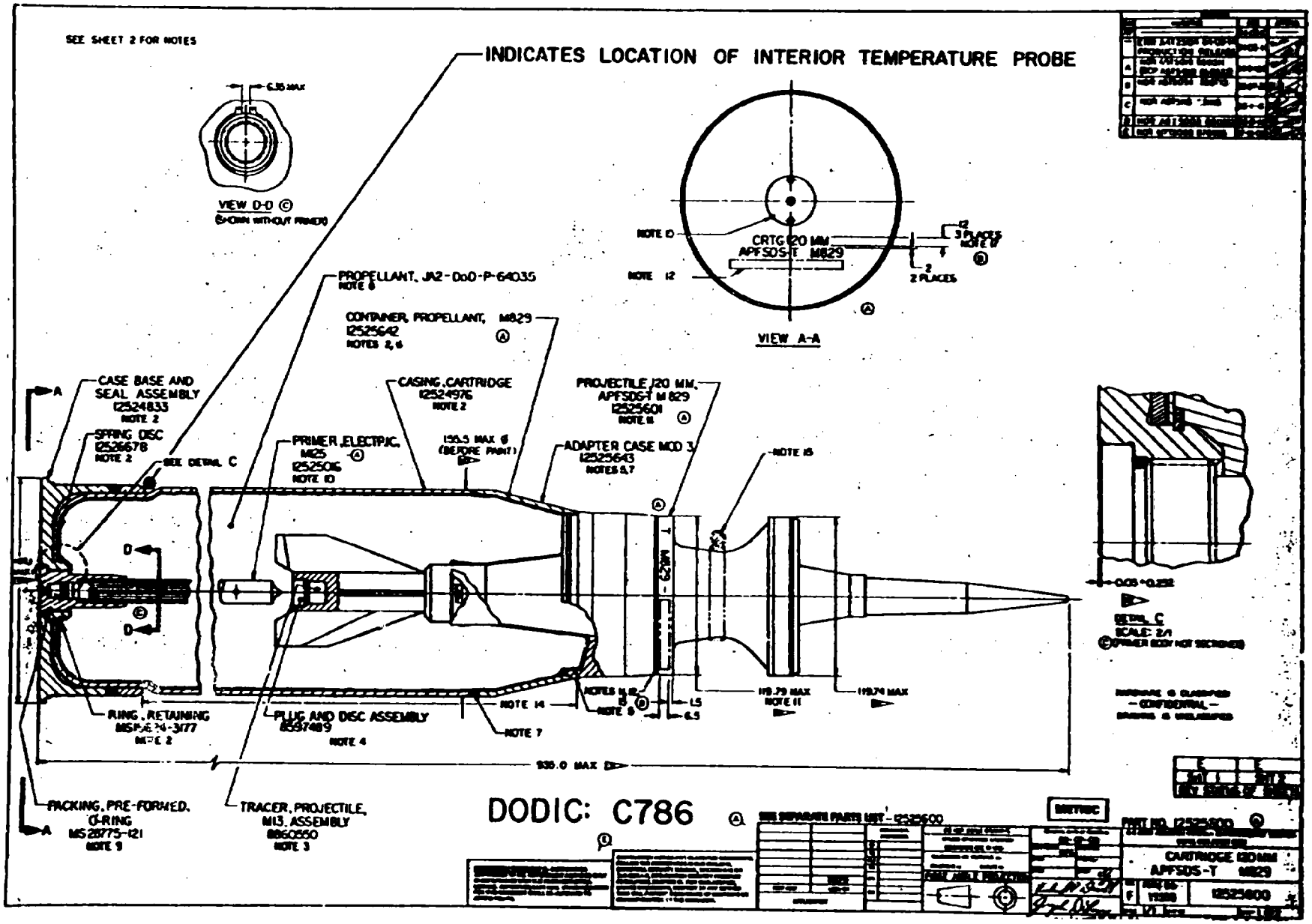
SEE SHEET 2 FOR NOTES
INDICATES LOCATION OF INTERIOR TEMPERATURE PROBE
VIEW D-D
VIEW A-A
CRTG 120 MM APFSDS-T M829
PROPELLANT, JA2-DoD-P-64035
CONTAINER, PROPELLANT, M829
CASE BASE AND SEAL ASSEMBLY
SPRING DISC
CASING, CARTRIDGE
PROJECTILE 120 MM, APFSDS-T M829
PRIMER, ELECTRIC, M25
ADAPTER CASE MOD 3
RING, RETAINING
PLUG AND DISC ASSEMBLY
PACKING, PRE-FORMED, O-RING
TRACER, PROJECTILE, M13, ASSEMBLY
DETAIL C
SCALE: 2/1
DODIC: C786
CARTRIDGE 120MM APFSDS-T M829
12525600

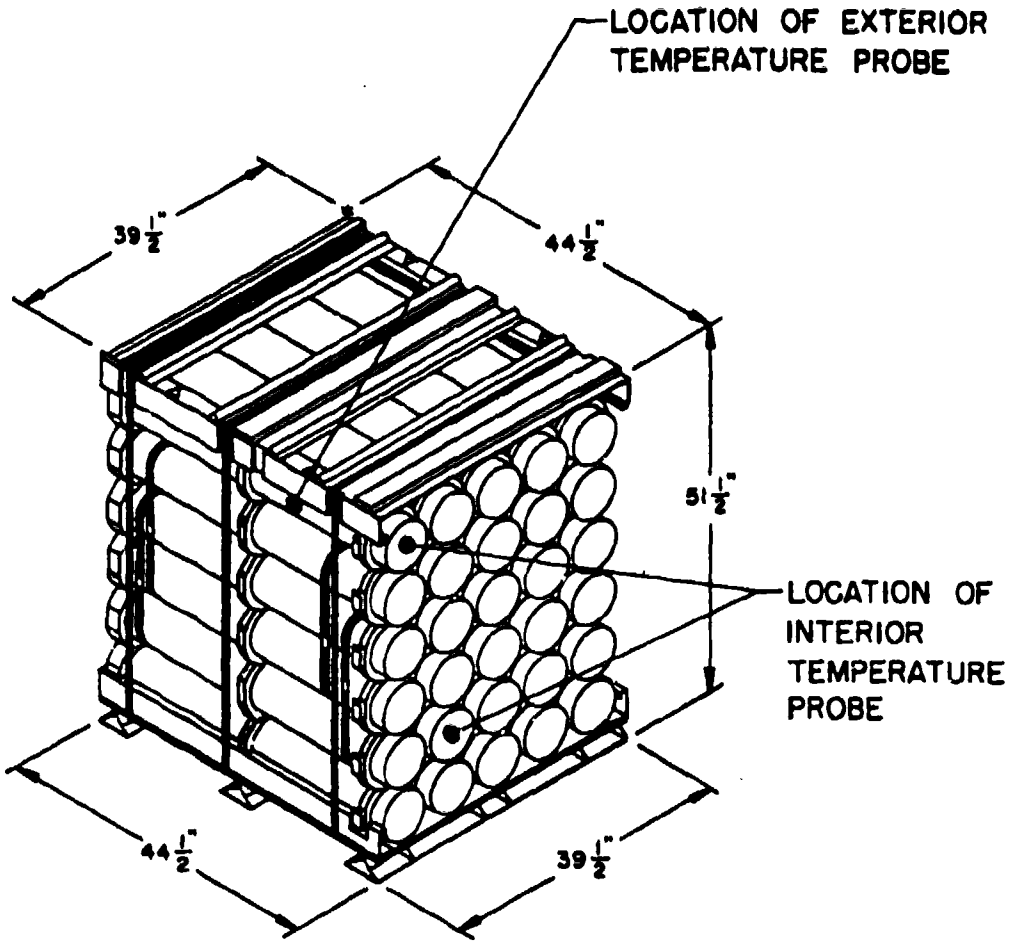

DODIC: C787

DRAFTSMAN TRS	TITLE CARTRIDGE, 120 MM HEAT-MP-T M830
TEST ENGINEER	
CHIEF, VALIDATION ENGINEERING DIVISION	U.S. ARMY DEFENSE AMMUNITION CENTER AND SCHOOL, SAVANNA, ILLINOIS 61074-9639

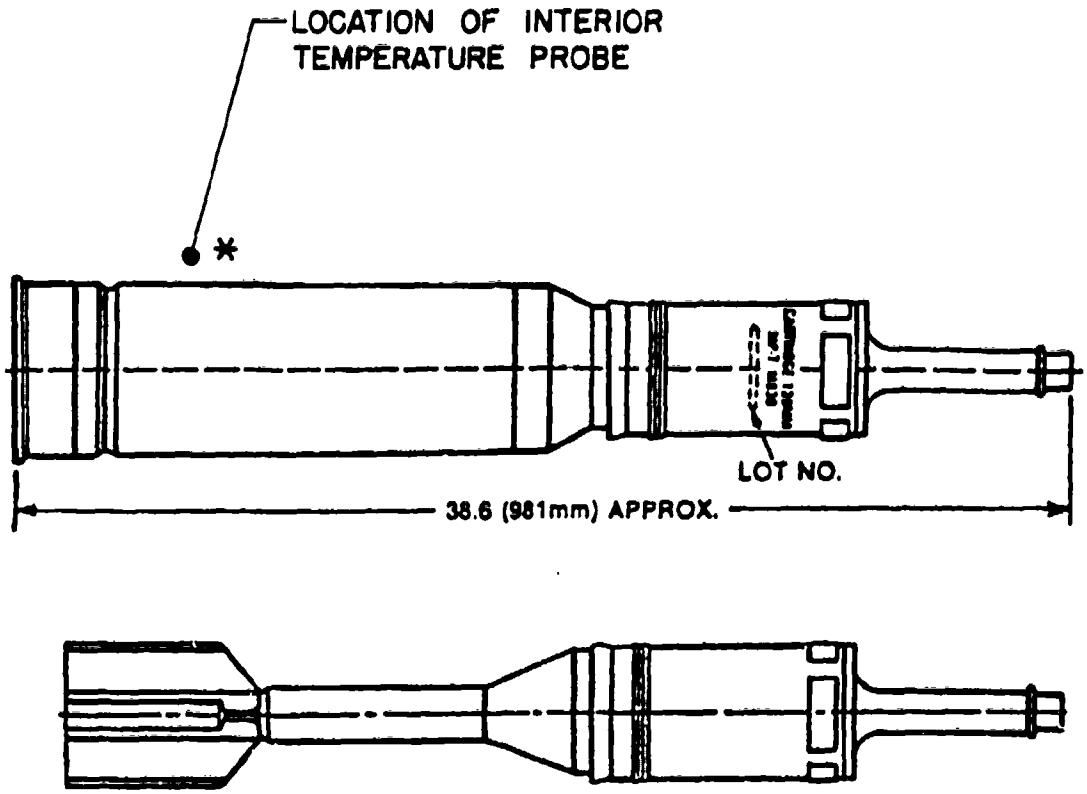

*POSITION PROBE INSIDE CONTAINER, BUT NOT IN DIRECT CONTACT WITH ROUND.

DODIC: C787

DRAFTSMAN TRS	TITLE CARTRIDGE, 120 MM HEAT-MP-T M830
TEST ENGINEER	
CHIEF, VALIDATION ENGINEERING DIVISION	U.S. ARMY DEFENSE AMMUNITION CENTER AND SCHOOL, SAVANNA, ILLINOIS 61074-9639

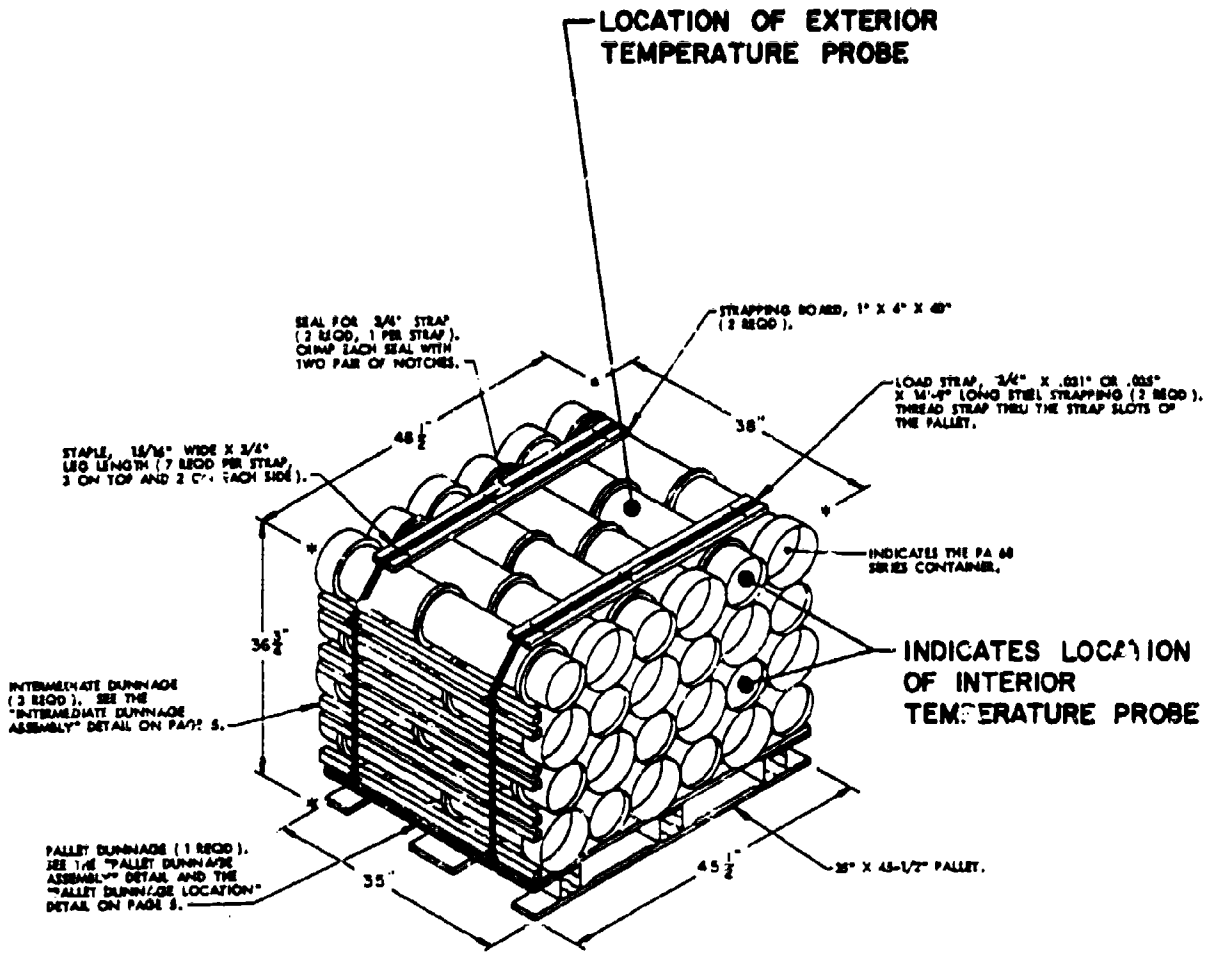

ISOMETRIC VIEW

DODIC: D532

DRAFTSMAN TRS	TITLE CHARGE, PROPELLING 155 MM RB M203
TEST ENGINEER	
CHIEF, VALIDATION ENGINEERING DIVISION	U.S. ARMY DEFENSE AMMUNITION CENTER AND SCHOOL, SAVANNA, ILLINOIS 61074-9639

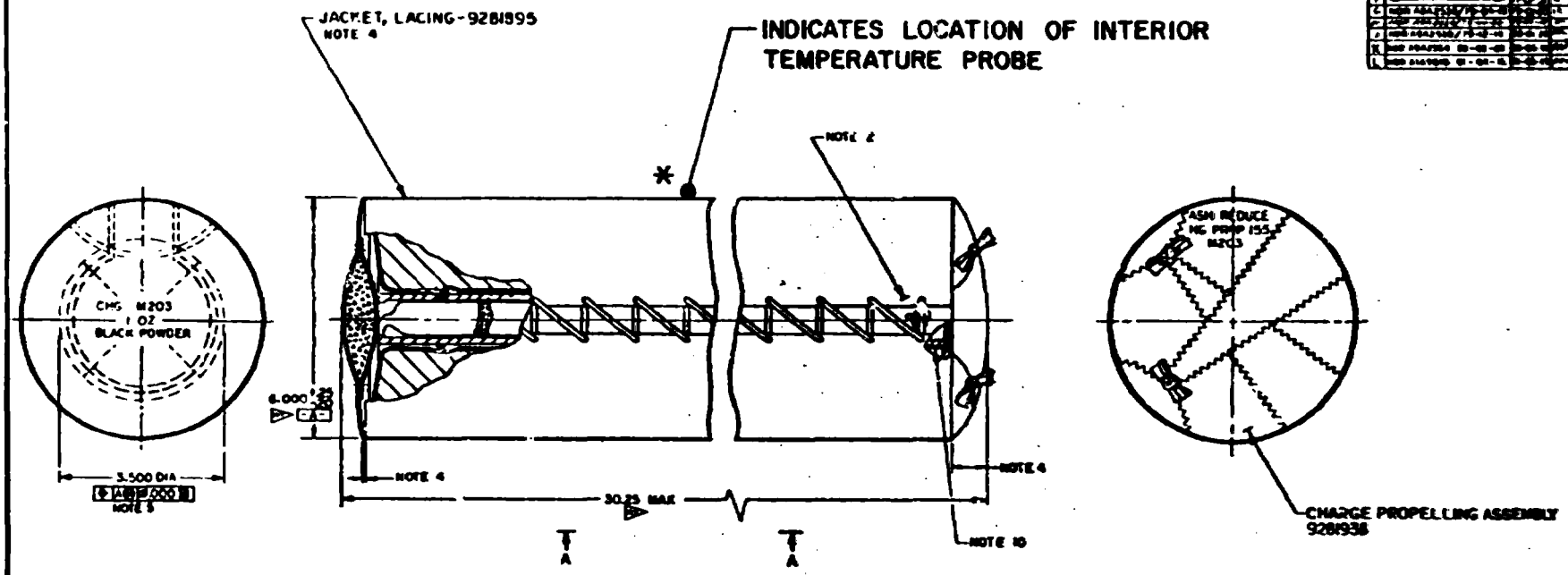

CHARGE PROPELLING M203
FOR 155MM HOW M198
LOT

VIEW A-A
(MARKING INFORMATION, R-57)

NOTES:

1- SPEC MIL-A-2550, ANSI Y14.5-1973 AND MIL-C-48245 APPLY.
2- SLIP LACING JACKET OVER CHARGE PROPELLING ASSEMBLY (NOTE 9) AND LACE TIGHTLY USING SILK LACING CORD, TYPE II, CLASS C, SPEC MIL-C-453. LACING TO BE TIED AT BOTH ENDS.
3- ONE IGNITER PROTECTOR CAP 8849912-1 OR ALTERNATIVE MUST BE PLACED OVER IGNITER END OF CHARGE WHEN PACKED FOR SHIPMENT.
4- JACKET MUST BE FLUSH TO 1.00 INCH BELOW FLUSH AT BOTH ENDS OF ASSEMBLED CHARGE, FOR A MINIMUM OF 270°.
5- GAGE DIMENSION INNER SEAM OF BASE PAD, EXCLUDING CLOSURE SEAM, SHALL BE WITHIN THIS DIMENSION.
6- TRIM ALL THREADS AT BASE END OF CHARGE TO 0.25 INCH MAX AND REMOVE ALL LOOSE THREADS ADHERING TO OUTER SURFACE OF THE COMPLETE CHARGE ASSEMBLY.
7- ▷ INTERFACE DIMENSION.
8- REFERENCE: FOR 155 MM WEAPONS SYSTEMS INTERFACE DIMENSION/REQUIREMENT, SEE INTERFACE CONTROL DRAWING BCE 9327790. ICD 9327790 IS FOR SOURCE REFERENCE ONLY AND NOT FOR MANUFACTURING USE. CHANGE TO 155 MM WEAPONS SYSTEMS INTERFACE DIMENSION/REQUIREMENT REQUIRES PRIOR APPROVAL OF PROJECT MANAGER, CANNON ARTILLERY WEAPONS SYSTEMS/JOINT PROJECT MANAGER, SEMI-ACTIVE LASER GUIDED PROJECTILES.
9- POSITION LACING AREA OF JACKET APPROXIMATELY 180° FROM BODY SEAMS.
10- FINAL ASSEMBLY IN VERTICAL POSITION WITH BASE IGNITER CAP AND TUBE ASSEMBLY END DOWN, SHALL BE SUCH THAT THE TUBE CAP SHALL BE 1/2 TO 1 1/2 INCHES BELOW THE END OF THE CHARGE.

*NOTE:
POSITION TEMPERATURE PROBE ON INERT CHARGE ONLY

DODIC: D532

SEE SEPARATE PARTS LIST-9281897

PART ID 9281897

CHARGE PROP M203 FOR 155MM HOW M198

F 15890 9281897

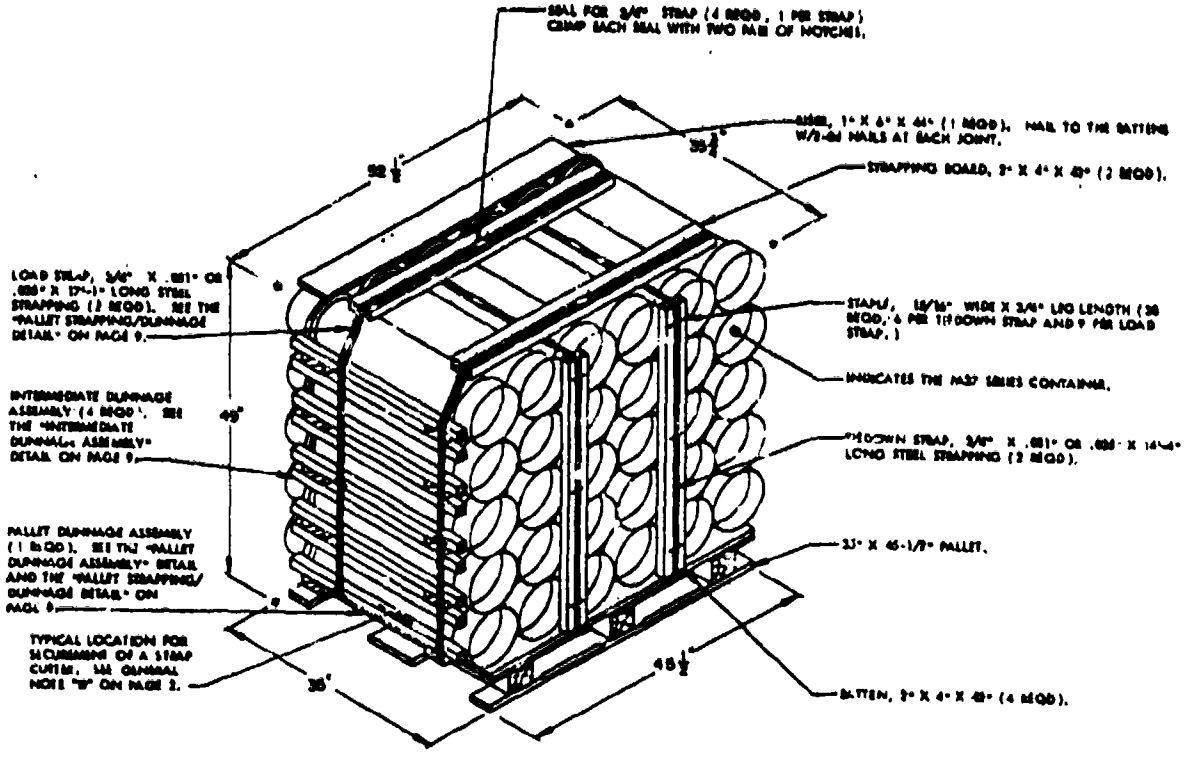

ISOMETRIC VIEW

DODIC: D533

DRAFTSMAN TRS	TITLE 155 MM PROPELLING CHARGE M119 SERIES W/O PRIMER
TEST ENGINEER	
CHIEF, VALIDATION ENGINEERING DIVISION	U.S. ARMY DEFENSE AMMUNITION CENTER AND SCHOOL, SAVANNA, ILLINOIS 61074-9639

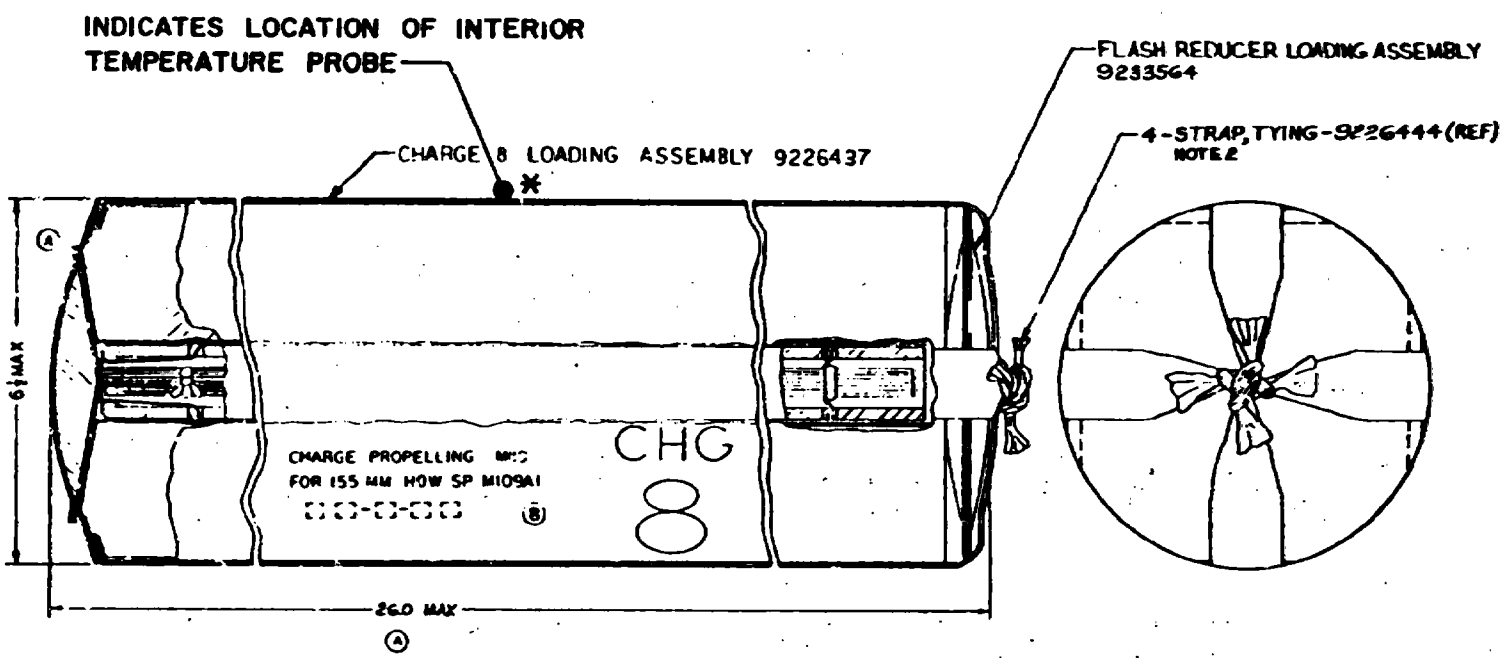

NOTES:

(B) 1-SPEC MIL-A-2550 AND MIL-C-14939 APPLY.
2-TIE AS SHOWN, 4-STRAP, TYING-9226444 WITH 2 SQUARE KNOTS.
(C) 3-ONE IGNITER PROTECTOR CAP 8843912-1 MUST BE PLACED OVER IGNITER END OF CHARGE WHEN PACKED FOR SHIPMENT AND REMOVED BEFORE FIRING. (SEE DWG C8843910)
4-THE COMPLETE CHARGE CONTAINS APPROX 335 OUNCES, M6 PROPELLANT, .055 MP WEB, WITH CENTRAL CORE IGNITION AND A 2.0 OZ APPROX CBI POWDER BASE IGNITER.
(D) 5-FOR USE IN M185 CANNON ONLY.

* POSITION PROBE ON INERT CHARGE ONLY

DODIC: D533

PART No. 9226436

10 MAY 68	CHARGE PROPELLING 155MM MK9 WHITE BAG CHG 8 FOR HOW SP M109A1		
	D	19203	9226436

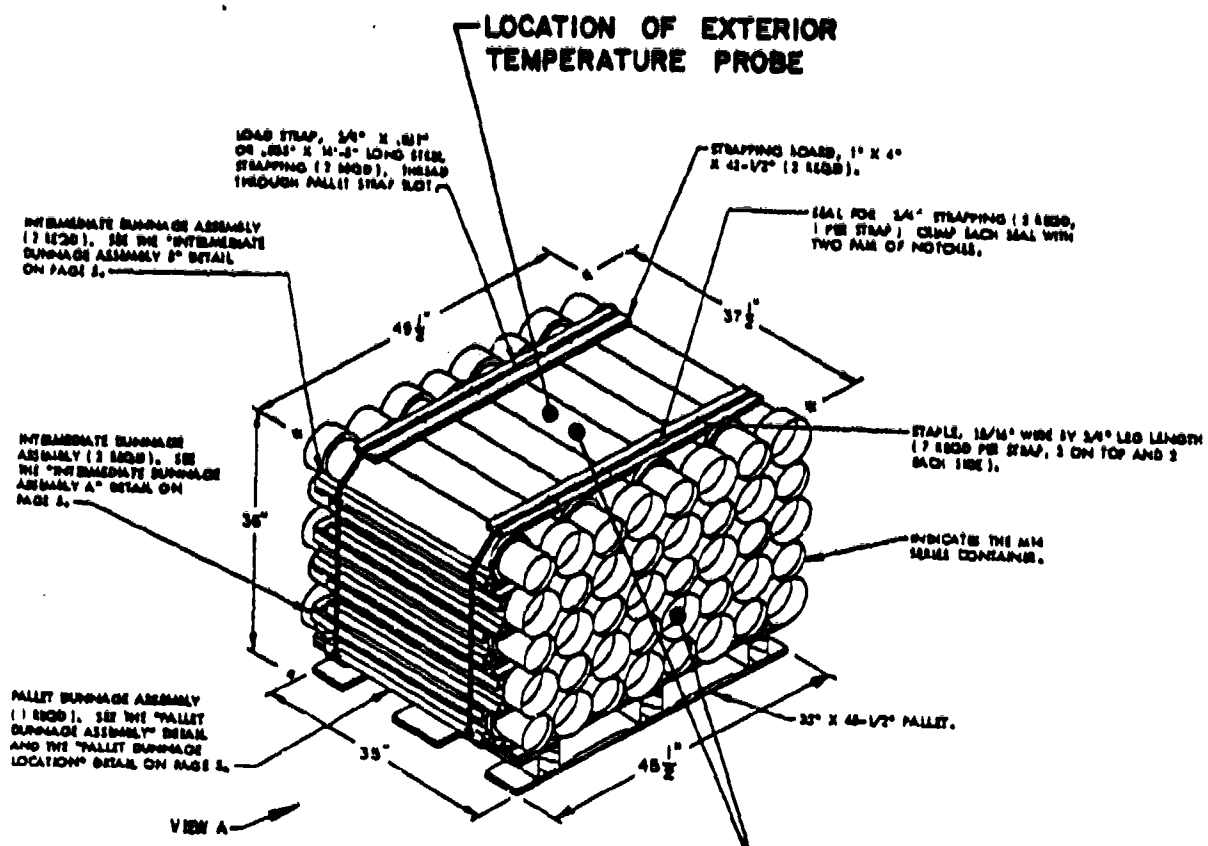

SPECIAL NOTE:

1. THE UNIT DEPICTED ABOVE MAY BE INCREASED BY ONE COMPLETE LAYER OF CONTAINERS BY THE ADDITION OF ONE MORE INTERMEDIATE DUNNAGE ASSEMBLY AND EIGHT MORE CONTAINERS, AND BY INCREASING STRAP LENGTHS APPROPRIATELY. THIS WILL RESULT IN AN OVERALL UNIT HEIGHT OF 41-15/16".

DODIC: D540

DRAFTSMAN TRS	TITLE PROPELLING CHARGE, M3 (GB) FOR 155 MM HOWITZER
TEST ENGINEER	
CHIEF, VALIDATION ENGINEERING DIVISION	U.S. ARMY DEFENSE AMMUNITION CENTER AND SCHOOL, SAVANNA, ILLINOIS 61074-9639

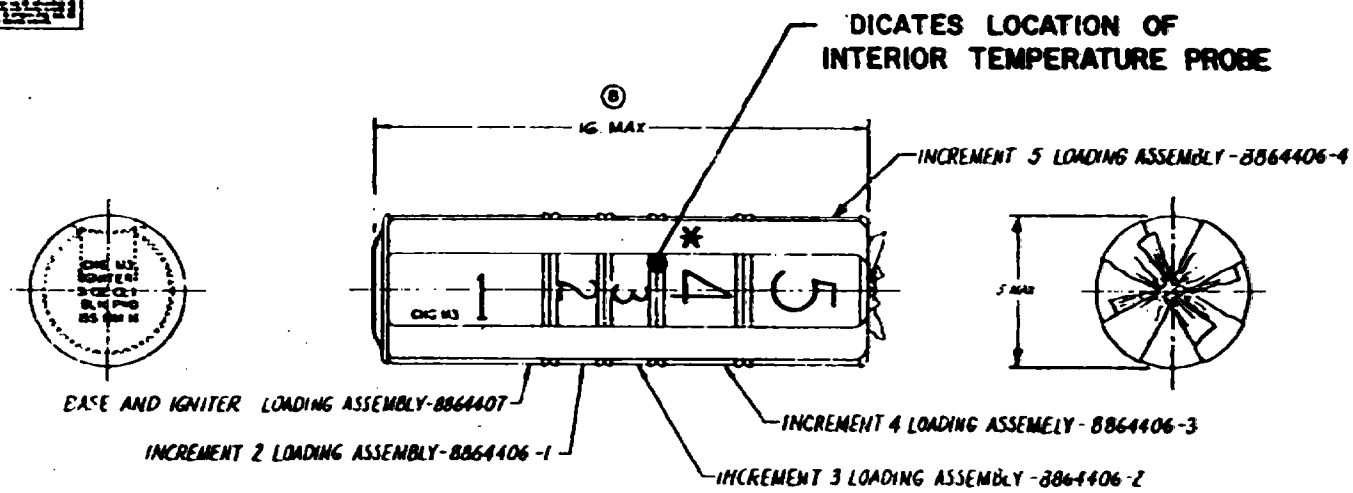

*NOTE: USE INERT CHARGE ONLY!

NOTES:-

(A) 1- SPEC MIL-A-2550 AND MIL-C-46503 APPLIES.
2- ONE IGNITER PROTECTOR CAP ORDNANCE PART NO. 8849912-2 OR ALTERNATIVE MUST BE PLACED OVER IGNITER END OF CHARGE, WHEN PACKED FOR SHIPMENT AND MUST BE REMOVED BEFORE FIRING. (SEE DWG C8645940).
3- SIMILAR TO PC MK 71-9-1TTA.

DODIC: D540

FOR LIST OF PARTS SEE ENGINEERING PARTS LIST 8864405

(A) DRAWING PART NO. 8864405

CHARGE, PROPELLING, (GB) FOR 155MM HOWI, M1, M1A1, M15 & M82

8864405

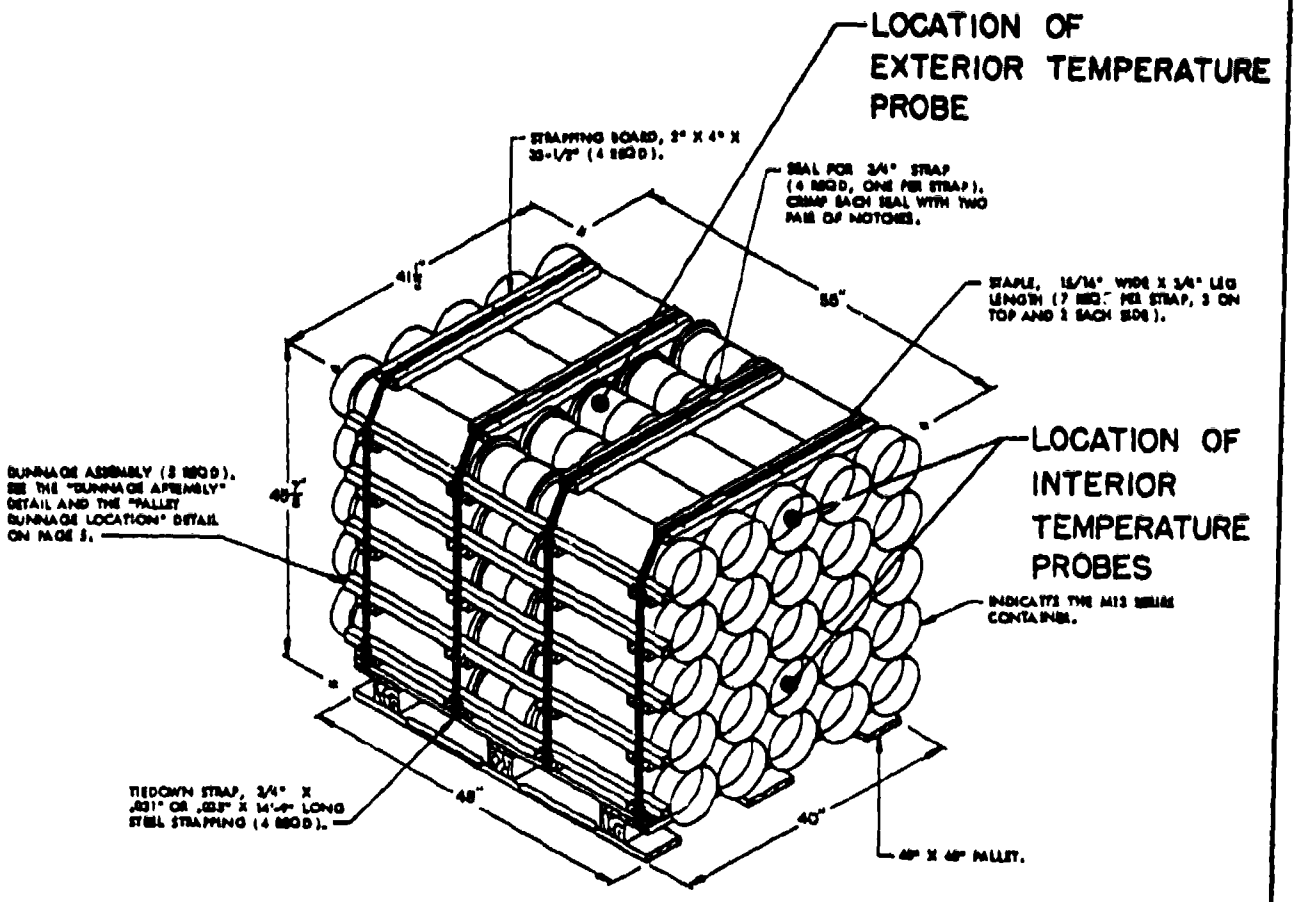

ISOMETRIC VIEW

DODIC: D541

DRAFTSMAN TRS	TITLE CHARGE, PROPELLING, 155 MM WB M4 SERIES
TEST ENGINEER	
CHIEF, VALIDATION ENGINEERING DIVISION	U.S. ARMY DEFENSE AMMUNITION CENTER AND SCHOOL, SAVANNA, ILLINOIS 61074-9639

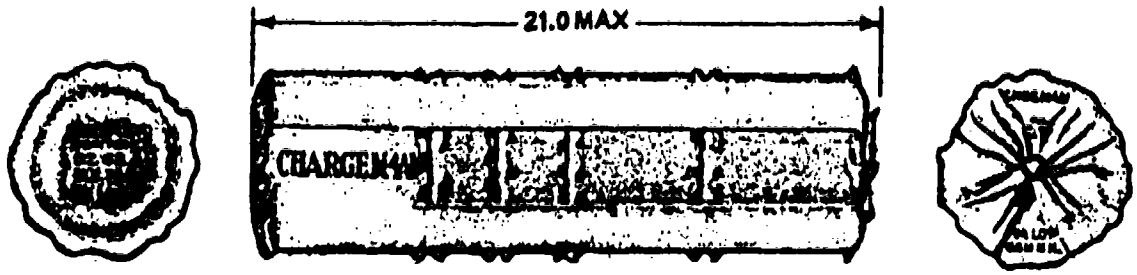

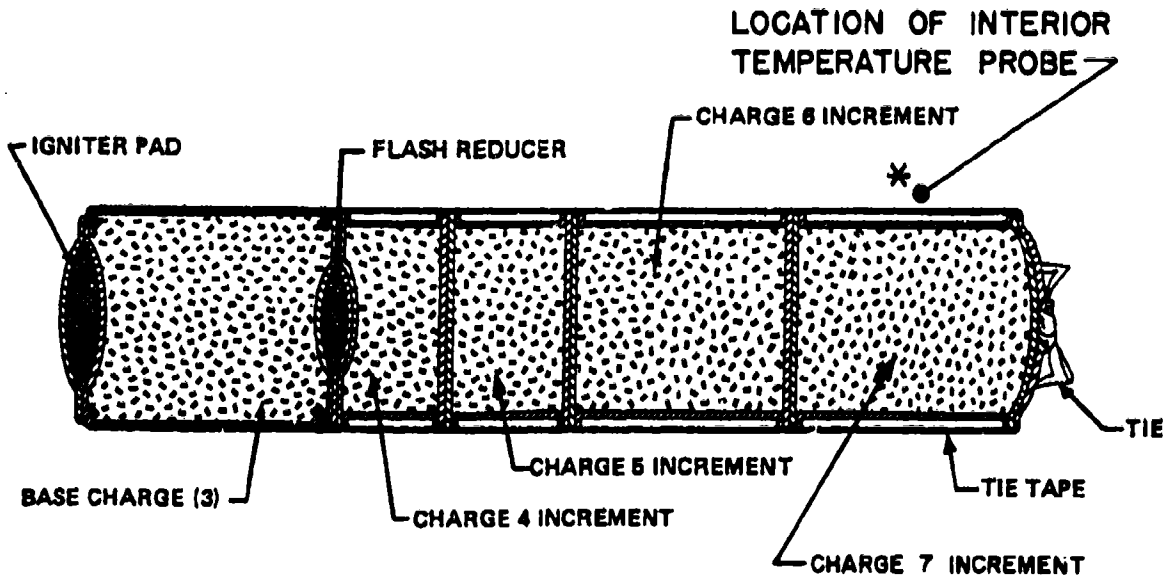

* POSITION PROBE INSIDE CONTAINER, BUT NOT IN DIRECT CONTACT WITH CHARGE.

DODIC: D541

DRAFTSMAN TRS	TITLE CHARGE, PROPELLING, 155 MM WB M4 SERIES
TEST ENGINEER	
CHIEF, VALIDATION ENGINEERING DIVISION	U.S. ARMY DEFENSE AMMUNITION CENTER AND SCHOOL, SAVANNA, ILLINOIS 61074-9639

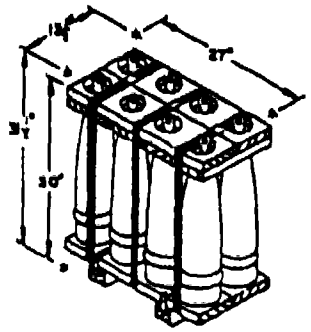

155MM, 8/PALLET (PALLET UNIT 1)

UNIT WEIGHT ——— [illegible] LBS (APPROX)
CUBE ——— 6.6 CU FT

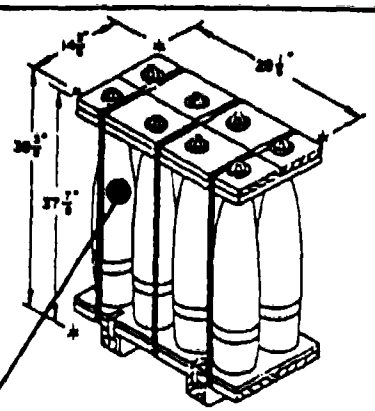

155MM, 8/PALLET (PALLET UNIT 2)

UNIT WEIGHT ——— [illegible] LBS (APPROX)
CUBE ——— 9.7 CU FT

LOCATION OF EXTERIOR TEMPERATURE PROBE

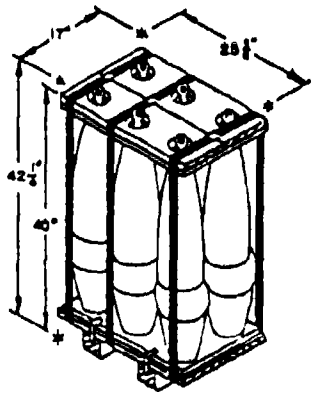

175MM, 6/PALLET (PALLET UNIT 3)

UNIT WEIGHT ——— 934 LBS (APPROX)
CUBE ——— 10.7 CU FT

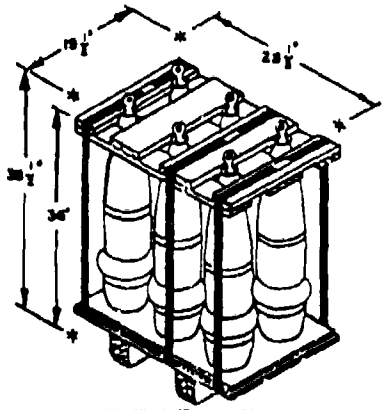

8", 6/PALLET (PALLET UNIT 4)

UNIT WEIGHT ——— 1,286 LBS (APPROX)
CUBE ——— 12.4 CU FT

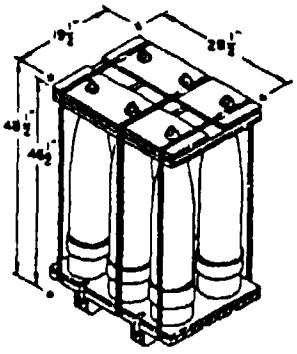

8", 6/PALLET (PALLET UNIT 5)

UNIT WEIGHT ——— 1,276 LBS (APPROX)
CUBE ——— 13.6 CU FT

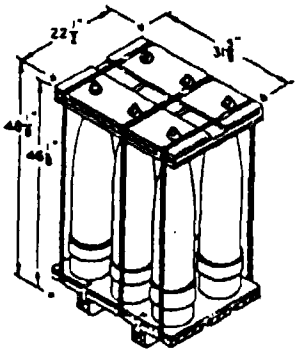

8", 6/PALLET (PALLET UNIT 6)

UNIT WEIGHT ——— 1,301 LBS (APPROX)
CUBE ——— 19.8 CU FT

PALLET UNIT DETAILS

DODIC: D579

DRAFTSMAN TRS	TITLE 155 MM PROJECTILE: HE, RA
TEST ENGINEER	
CHIEF, VALIDATION ENGINEERING DIVISION	U.S. ARMY DEFENSE AMMUNITION CENTER AND SCHOOL, SAVANNA, ILLINOIS 61074-9639

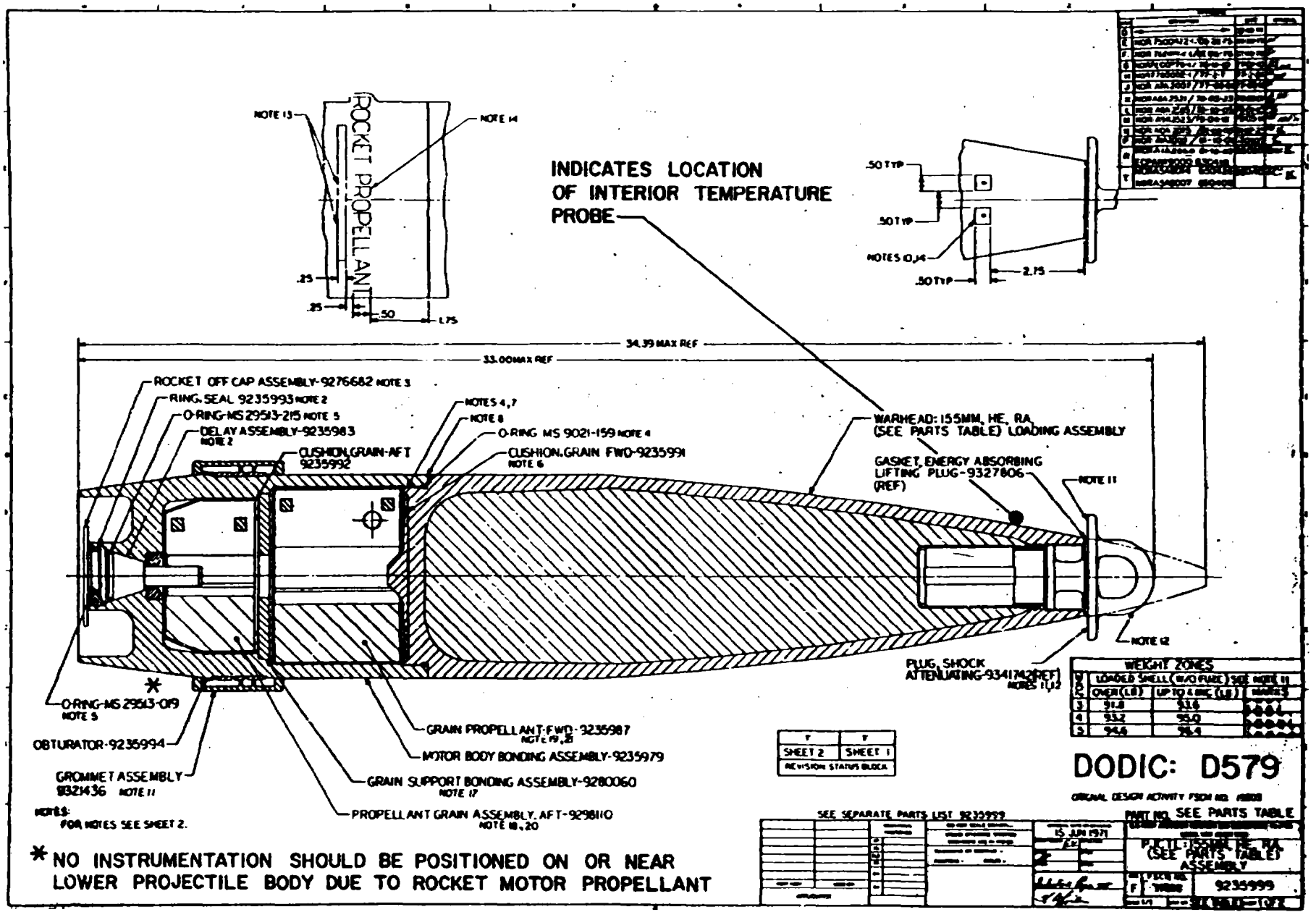
ROCKET PROPELLANT
NOTE 13
NOTE 14
.25
.25
.50
1.75
INDICATES LOCATION OF INTERIOR TEMPERATURE PROBE
.50 TYP
.50 TYP
NOTES 10,14
.50 TYP
2.75
34.39 MAX REF
33.00 MAX REF
ROCKET OFF CAP ASSEMBLY-9276682 NOTE 3
RING, SEAL 9235993 NOTE 2
O-RING-MS 29513-215 NOTE 5
DELAY ASSEMBLY-9235983 NOTE 2
CUSHION, GRAIN-AFT 9235992
NOTES 4,7
NOTE 8
O-RING MS 9021-159 NOTE 4
CUSHION, GRAIN FWD-9235991 NOTE 6
WARHEAD: 155MM, HE, RA (SEE PARTS TABLE) LOADING ASSEMBLY
GASKET, ENERGY ABSORBING
LIFTING PLUG-9327806 (REF)
NOTE 11
NOTE 12
PLUG, SHOCK ATTENUATING-9341742 (REF) NOTES 11,12
*
O-RING-MS 29513-019 NOTE 5
OBTURATOR-9235994
GROMMET ASSEMBLY 9321436 NOTE 11
GRAIN PROPELLANT-FWD-9235987 NOTE 19,20
MOTOR BODY BONDING ASSEMBLY-9235979
GRAIN SUPPORT BONDING ASSEMBLY-9280060 NOTE 17
PROPELLANT GRAIN ASSEMBLY, AFT-9298110 NOTE 18,20
NOTES: FOR NOTES SEE SHEET 2.
* NO INSTRUMENTATION SHOULD BE POSITIONED ON OR NEAR LOWER PROJECTILE BODY DUE TO ROCKET MOTOR PROPELLANT
WEIGHT ZONES
LOADED SHELL (W/O FUZE) SEE NOTE 11
OVER (LB) | UP TO & INC (LB) | MARKS
3 | 91.8 | 93.6
4 | 93.2 | 95.0
5 | 94.6 | 96.4
SHEET 2 | SHEET 1
REVISION STATUS BLOCK
DODIC: D579
ORIGINAL DESIGN ACTIVITY PSN NO. 1800
PART NO. SEE PARTS TABLE
SEE SEPARATE PARTS LIST 9235999
15 JUN 1971
PROJ: 155MM HE, RA (SEE PARTS TABLE) ASSEMBLY
9235999

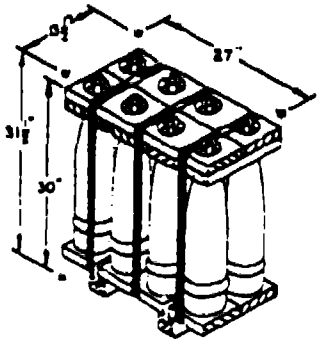

155MM. 8/PALLET (SMALL)

UNIT WEIGHT ——— 860 LBS (APPROX)
CUBE ——— 6.6 CU FT

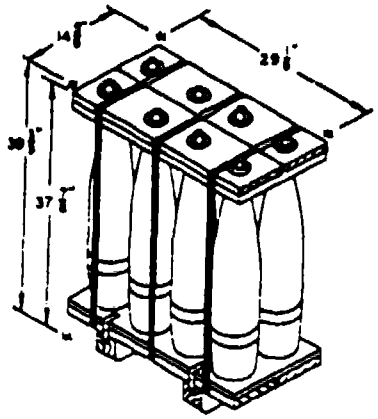

155MM. 8/PALLET (LARGE)

UNIT WEIGHT ——— 860 LBS (APPROX)
CUBE ——— 9.7 CU FT

LOCATION OF EXTERIOR TEMPERATURE PROBE

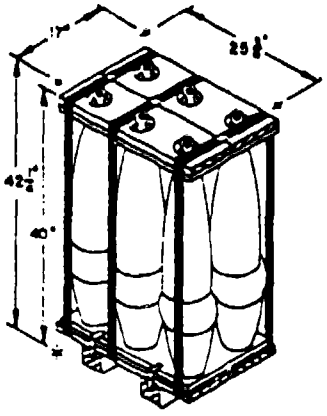

175MM. 6/PALLET

UNIT WEIGHT ——— 934 LBS (APPROX)
CUBE ——— 10.7 CU FT

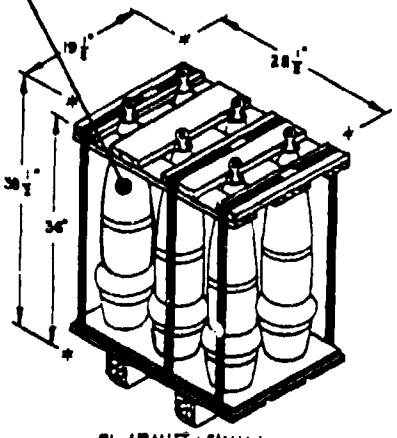

8". 6/PALLET (SMALL)

UNIT WEIGHT ——— 1,256 LBS (APPROX)
CUBE ——— 12.4 CU FT

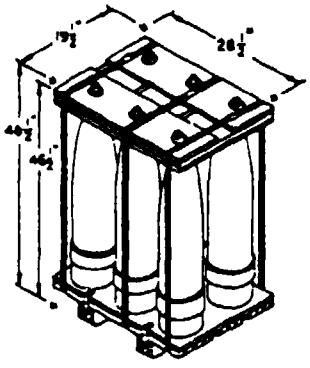

8". 6/PALLET (TALL)

UNIT WEIGHT ——— 1,256 LBS (APPROX)
CUBE ——— 15.6 CU FT

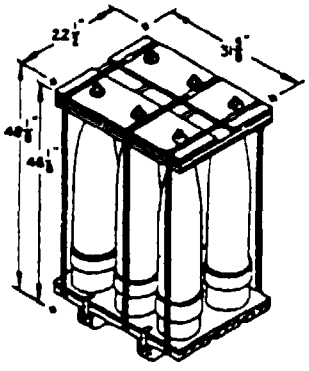

8". 6/PALLET (LARGE)

UNIT WEIGHT ——— 1,301 LBS (APPROX)
CUBE ——— 19.8 CU FT

PALLET UNIT DETAILS

DODIC: D624

DRAFTSMAN TRS	TITLE 8 INCH PROJECTILE, RA, HE: M650
TEST ENGINEER	
CHIEF, VALIDATION ENGINEERING DIVISION	U.S. ARMY DEFENSE AMMUNITION CENTER AND SCHOOL, SAVANNA, ILLINOIS 61074-9639

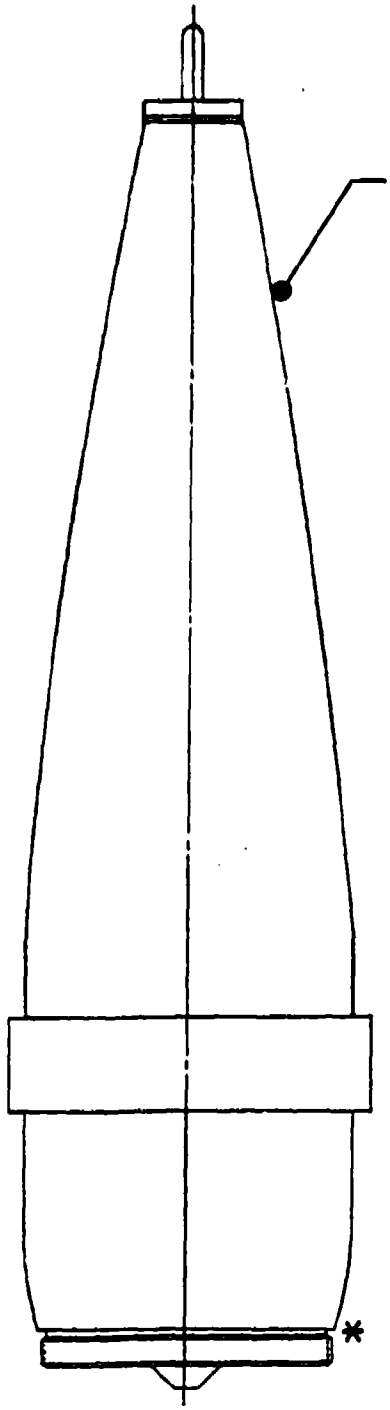

DODIC: D624

DRAFTSMAN TRS	TITLE 8 INCH PROJECTILE
TEST ENGINEER	
CHIEF, VALIDATION ENGINEERING DIVISION	U.S. ARMY DEFENSE AMMUNITION CENTER AND SCHOOL, SAVANNA, ILLINOIS 61074-9639

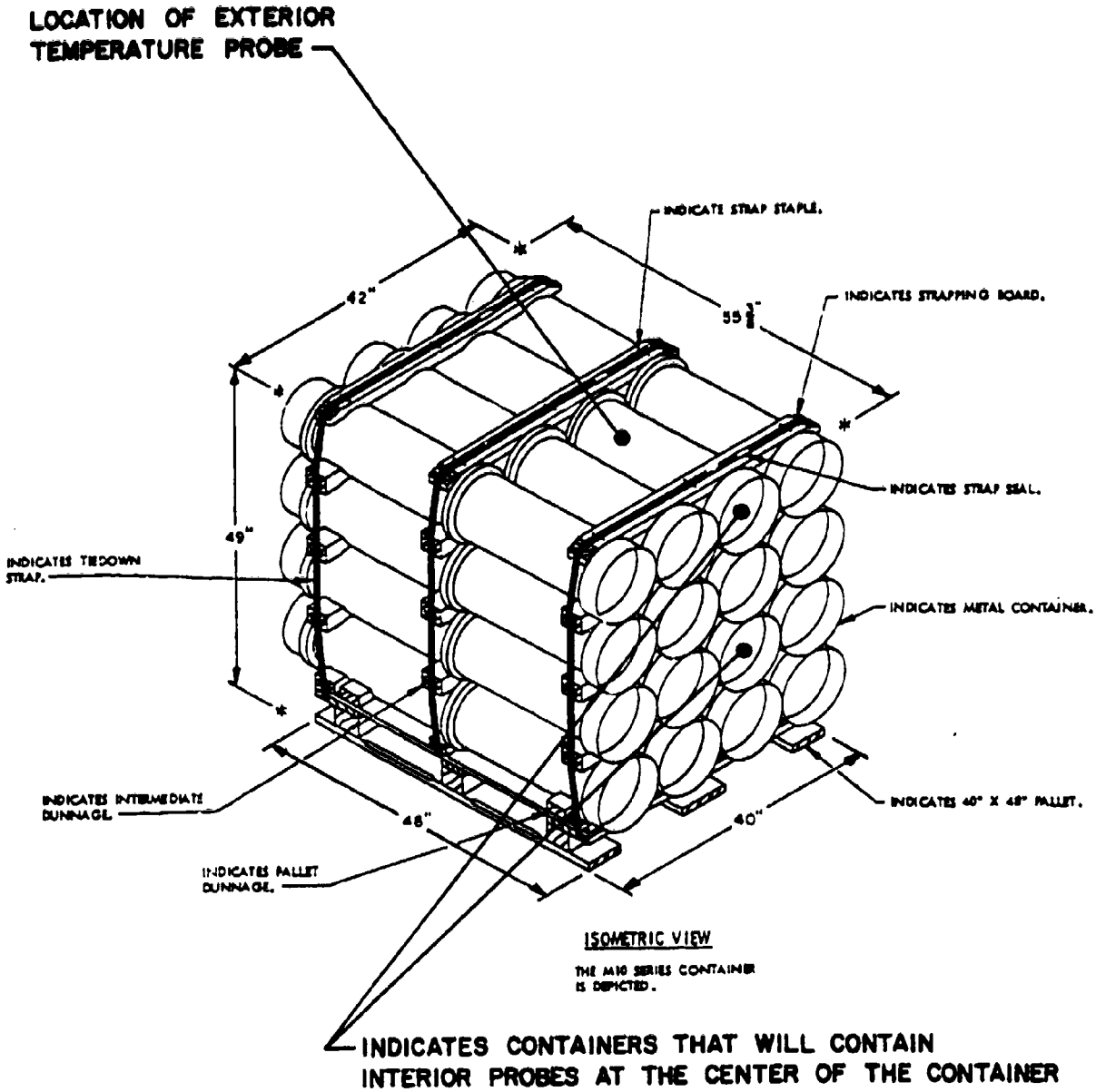

DODIC: D662

DRAFTSMAN TRS	TITLE 8 IN. PROP CHARGE, XM188E2, FOR 8 INCH HOW., SP, M110E2
TEST ENGINEER	
CHIEF, VALIDATION ENGINEERING DIVISION	U.S. ARMY DEFENSE AMMUNITION CENTER AND SCHOOL, SAVANNA, ILLINOIS 61074-9639

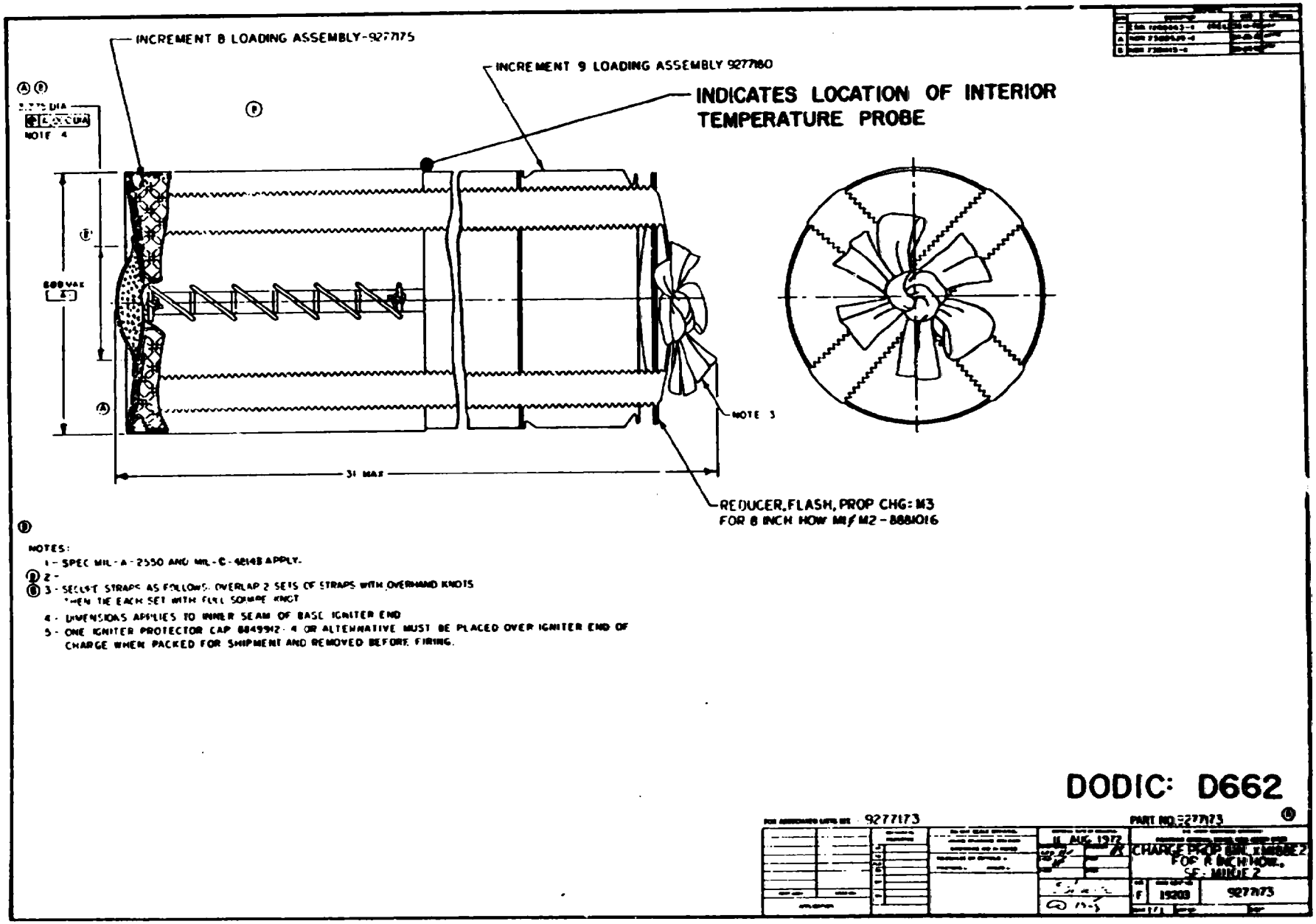
INCREMENT 8 LOADING ASSEMBLY-927175
INCREMENT 9 LOADING ASSEMBLY 927180
INDICATES LOCATION OF INTERIOR TEMPERATURE PROBE
NOTE 4
NOTE 3
31 MAX
REDUCER, FLASH, PROP CHG: M3
FOR 8 INCH HOW M1 & M2 - 888016
NOTES:
1 - SPEC MIL-A-2550 AND MIL-C-48148 APPLY.
2 -
3 - SECURE STRAPS AS FOLLOWS: OVERLAP 2 SETS OF STRAPS WITH OVERHAND KNOTS THEN TIE EACH SET WITH FLAT SQUARE KNOT
4 - DIMENSIONS APPLIES TO INNER SEAM OF BASE IGNITER END
5 - ONE IGNITER PROTECTOR CAP 8849942-4 OR ALTERNATIVE MUST BE PLACED OVER IGNITER END OF CHARGE WHEN PACKED FOR SHIPMENT AND REMOVED BEFORE FIRING.
DODIC: D662
PART NO. 927173
927173
11 AUG 1972
CHARGE PROP BR, 8 INCH HOW.
FOR 8 INCH HOW.
SE. MIKE 2
19209
927173

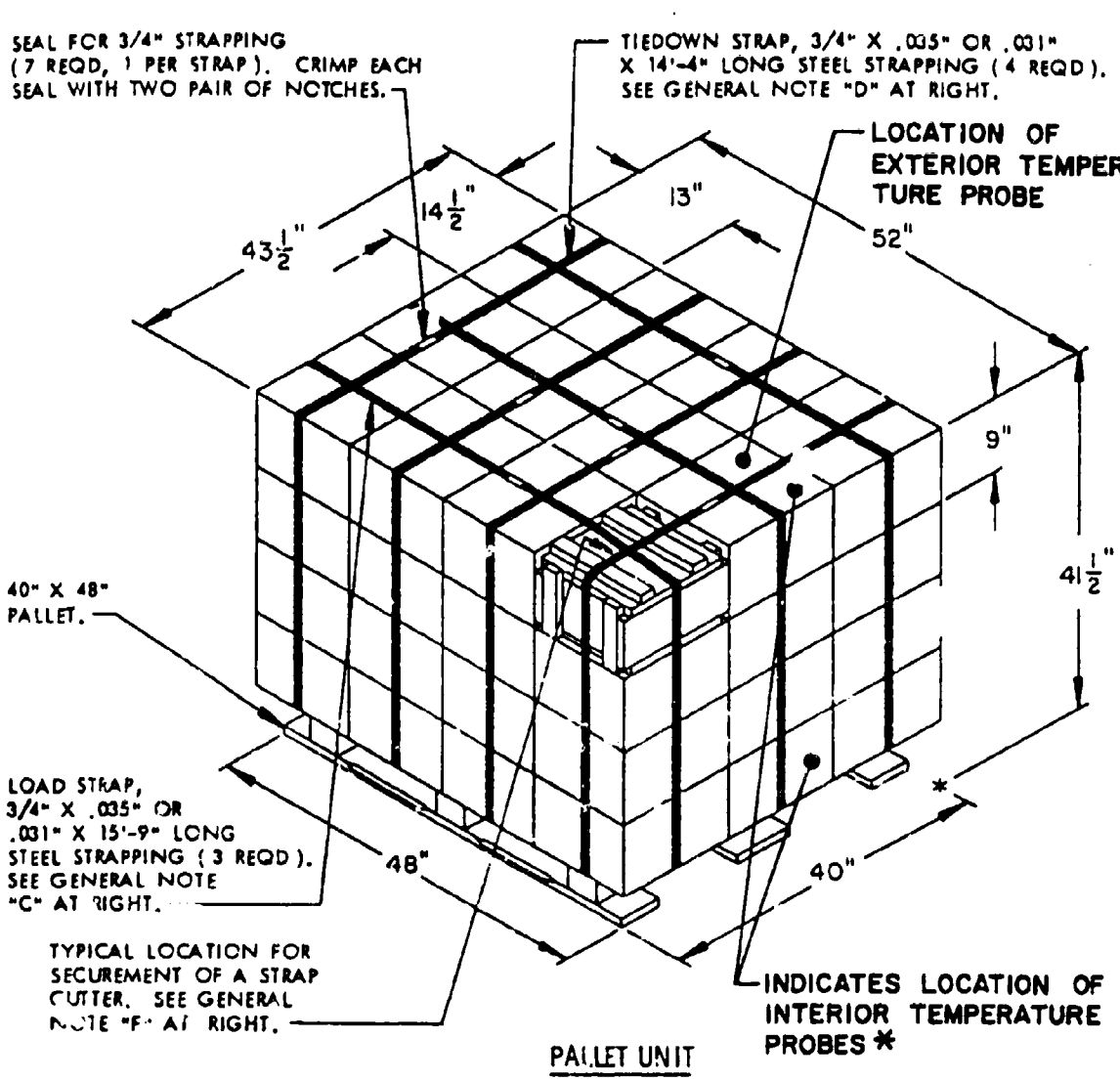

PALLET UNIT

SEE GENERAL NOTE "B" AT RIGHT.

48 BOXES OF HAND GRENADE (16 PER BOX) @ 43 LBS	2,064 LBS (APPROX)
DUNNAGE	8 LBS
PALLET	80 LBS
TOTAL WEIGHT	2,152 LBS (APPROX)
CUBE	54.3 CU FT (APPROX)

*NOTE: POSITION PROBES INSIDE FIBER CONTAINER WITH INERT GRENADE

DODIC: G881

DRAFTSMAN TRS	TITLE GRENADES (GENERAL)
TEST ENGINEER	
CHIEF, VALIDATION ENGINEERING DIVISION	U.S. ARMY DEFENSE AMMUNITION CENTER AND SCHOOL, SAVANNA, ILLINOIS 61074-9639

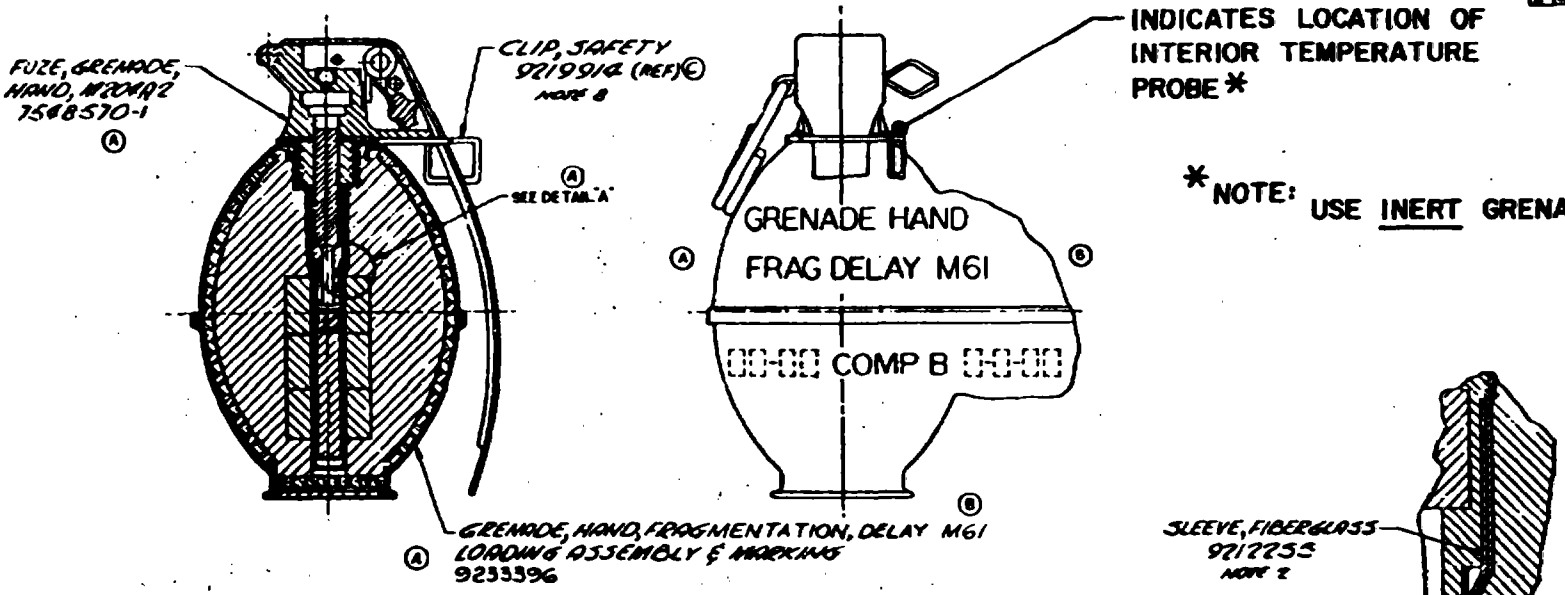

*NOTE: USE INERT GRENADE

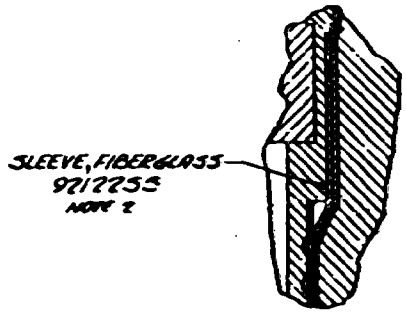

DETAIL "A"
NOT TO SCALE

NOTES:-

Ⓐ
1- SPEC MIL-P-8550 AND PA-PD-3083 APPLY.
2- SLIDE A LENGTH OF FIBERGLASS SLEEVING OVER THE .33 DIA OF THE FUZE HOUSING UNTIL IT BUTTS AGAINST SHOULDER, UNDER THE THREADS. (NOTE 7)
3- MICROWAXTRY BEFORE ASSEMBLING, COAT THREADS OF FUZE WITH COATING COMPOUND, BITUMINOUS, SOLVENT TYPE, TYPE I OR II, SPEC MIL-C-450.
4- ASSEMBLE FUZE USING 5 ft. TO 70 in LB TORQUE.
5- WHEN NECESSARY RESPACED SAFETY PIN TO GIVE RESISTANCE TO WITHDRAWAL ROD MIN TO 30 LB MAX.
6- RETOUCH PAINTED SURFACES IF NECESSARY WITH FINISH NO. 20.1 (FUNE DRAB NO. 13400B) OF MIL-STD-171.
7- APPLICATION OF FLUOROCARBON LUBRICANT, TYPE III, SPEC MIL-L-60936 TO FIBERGLASS SLEEVE 24 HOURS BEFORE ASSEMBLY PERMITTED.
8- SAFETY CLIP TO BE INSTALLED AFTER FUZE HAS BEEN TORQUED IN PLACE.

DODIC: G881

FOR ASSOCIATED LISTS - SEE 9231594

Ⓐ PART NO. 9231594 Ⓑ

			12 DEC 1967	GRENADE, HAND: FRAGMENTATION, DELAY, M61
				D 19A13 9231594

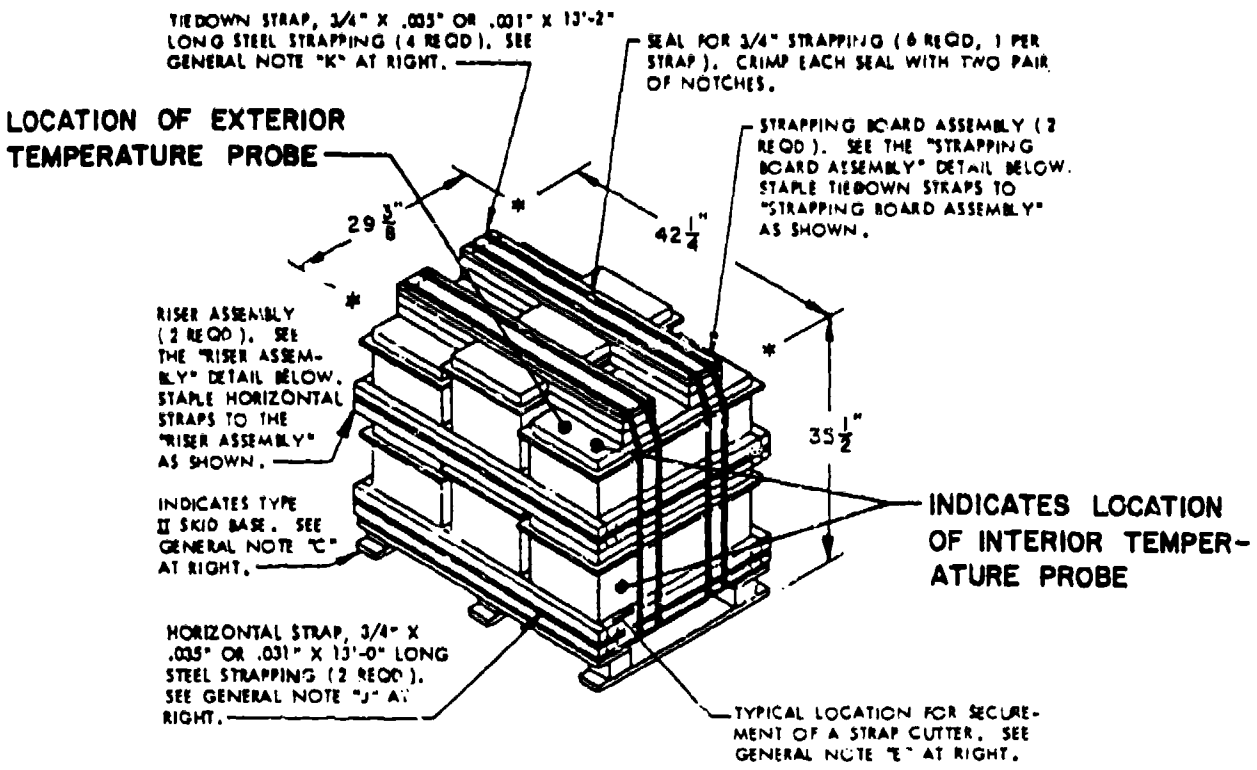

SKIDDED UNIT

SEE GENERAL NOTE "B" AT RIGHT.

6 BOXES OF MINES (40 PER METAL BOX) @ 219 LBS	1,314 LBS	(APPROX)
DUNNAGE	91 LBS	
SKID	33 LBS	
TOTAL WEIGHT	1,438 LBS	(APPROX)
CUBE	25.5 CU FT	(APPROX)

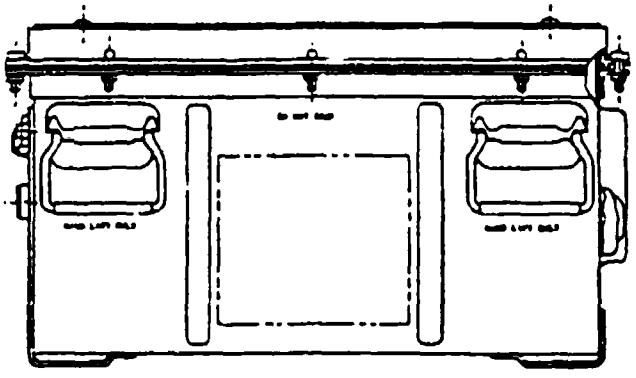

METAL CONTAINER

DODIC: K184

DRAFTSMAN TRS	TITLE M74/M75 MINE, GEMSS
TEST ENGINEER	
CHIEF, VALIDATION ENGINEERING DIVISION	U.S. ARMY DEFENSE AMMUNITION CENTER AND SCHOOL, SAVANNA, ILLINOIS 61074-9639

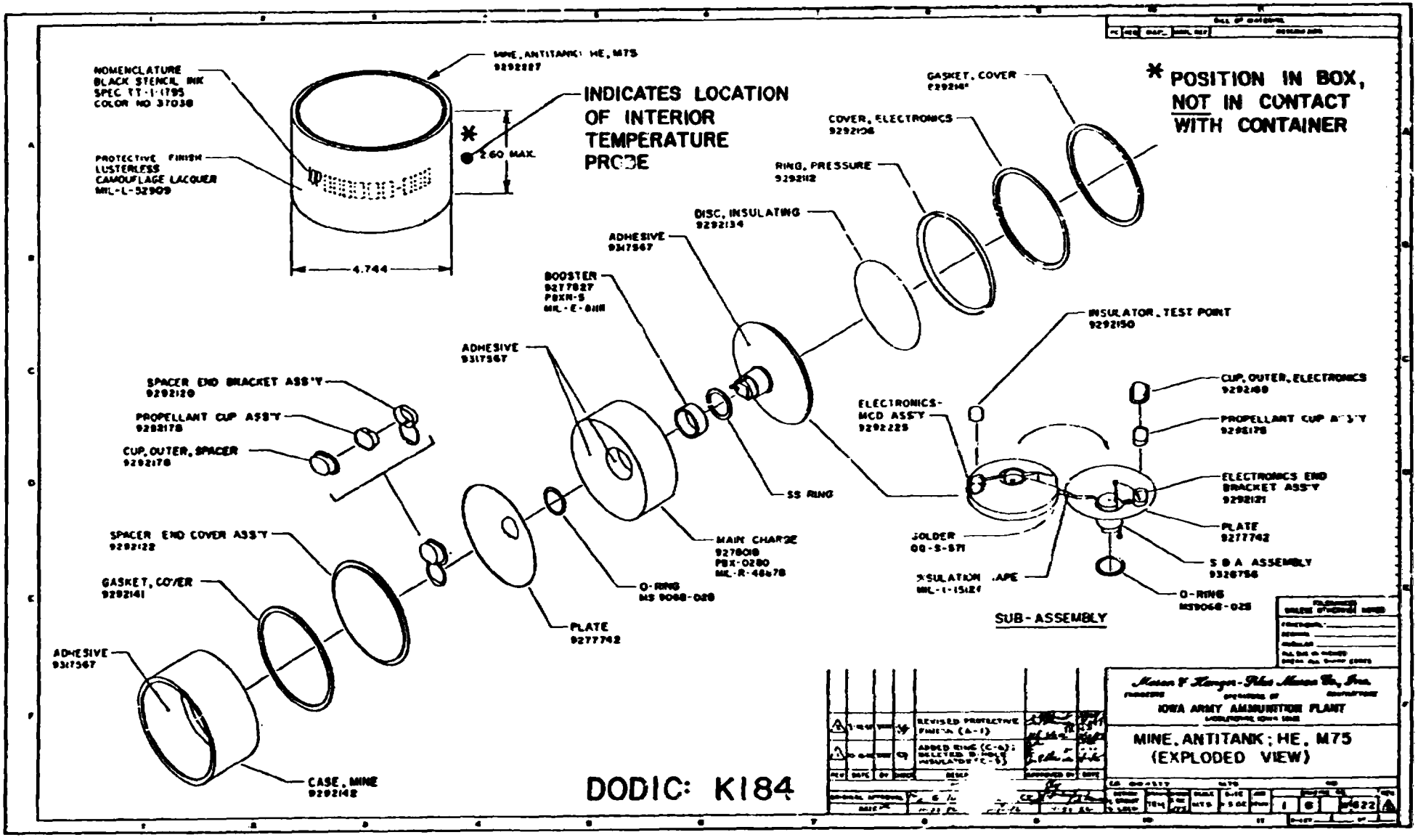
MINE, ANTITANK; HE, M75
9292227
NOMENCLATURE
BLACK STENCIL INK
SPEC TT-I-1795
COLOR NO 37038
PROTECTIVE FINISH
LUSTERLESS
CAMOUFLAGE LACQUER
MIL-L-52909
INDICATES LOCATION OF INTERIOR TEMPERATURE PROBE
2.60 MAX.
4.744
* POSITION IN BOX, NOT IN CONTACT WITH CONTAINER
GASKET, COVER
COVER, ELECTRONICS
9292136
RING, PRESSURE
9292112
DISC, INSULATING
9292134
ADHESIVE
9317567
BOOSTER
9277827
PBXN-5
MIL-E-8611
ADHESIVE
9317567
INSULATOR, TEST POINT
9292150
SPACER END BRACKET ASS'Y
9292120
PROPELLANT CUP ASS'Y
9292178
CUP, OUTER, SPACER
9292170
ELECTRONICS-MCD ASS'Y
9292225
CUP, OUTER, ELECTRONICS
9292169
PROPELLANT CUP ASS'Y
9292178
ELECTRONICS END BRACKET ASS'Y
9292121
SS RING
MAIN CHARGE
9278018
PBX-0280
MIL-R-46678
SPACER END COVER ASS'Y
9292122
SOLDER
QQ-S-571
PLATE
9277742
S D A ASSEMBLY
9326756
GASKET, COVER
9292141
O-RING
MS 9068-028
INSULATION TAPE
MIL-I-15126
O-RING
MS9068-025
SUB-ASSEMBLY
PLATE
9277742
ADHESIVE
9317567
CASE, MINE
9292142
DODIC: K184
REVISED PROTECTIVE FINISH (A-1)
ADDED RING (C-6); DELETED B. INSULATOR (C-5)
IOWA ARMY AMMUNITION PLANT
MINE, ANTITANK; HE, M75
(EXPLODED VIEW)

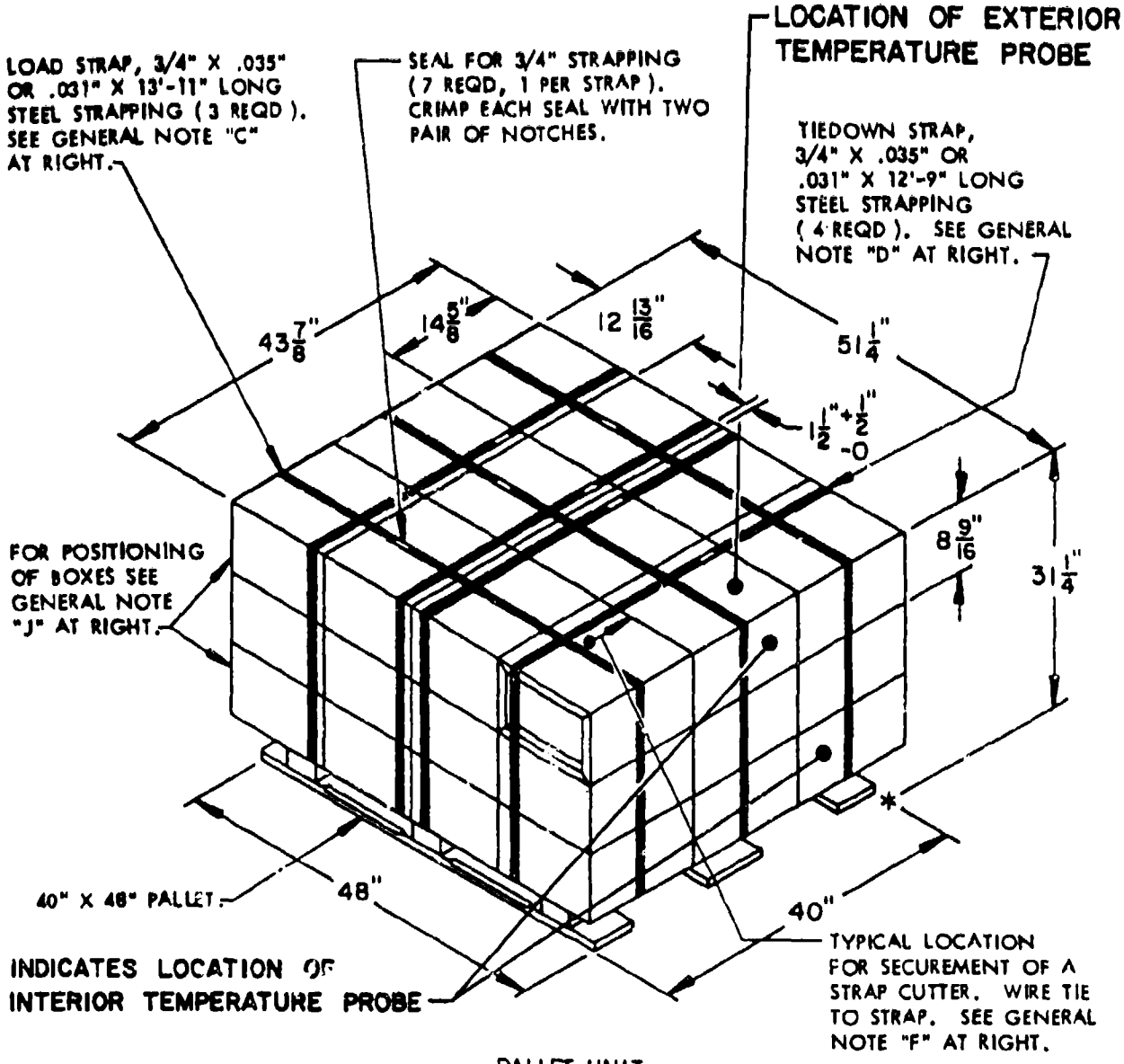

PALLET UNIT

SEE GENERAL NOTE "B" AT RIGHT.

36 BOXES OF FUZES (16 PER BOX) @ 60 LBS	2,160 LBS (APPROX)
DUNNAGE	7 LBS
PALLET	80 LBS
TOTAL WEIGHT	2,247 LBS (APPROX)
CUBE	40.7 CU FT (APPROX)

DODIC: N285

DRAFTSMAN TRS	TITLE M577A1 FUZE
TEST ENGINEER	
CHIEF, VALIDATION ENGINEERING DIVISION	U.S. ARMY DEFENSE AMMUNITION CENTER AND SCHOOL, SAVANNA, ILLINOIS 61074-9639

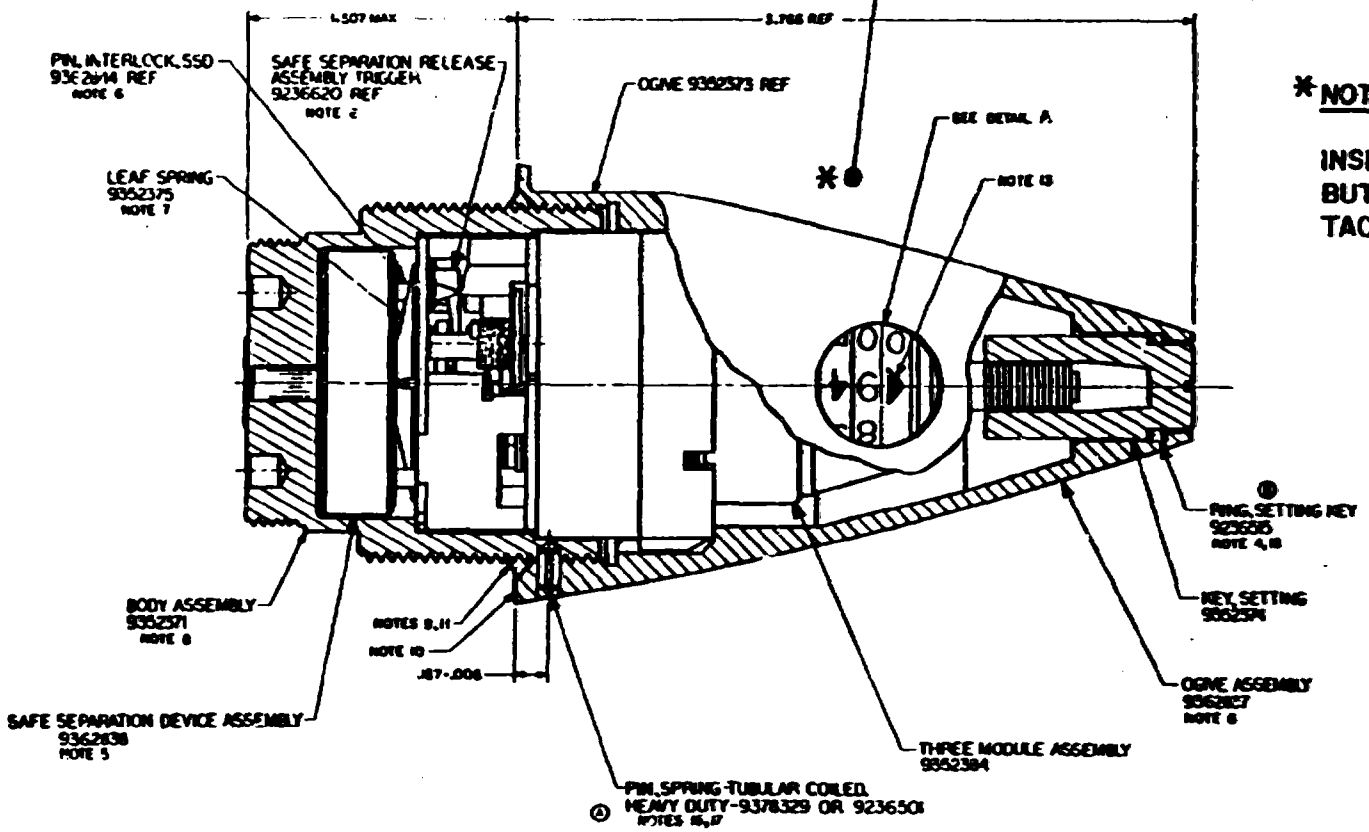

*NOTE:
AFFIX PROBE TO INSIDE METAL CONTAINER, BUT NOT IN DIRECT CONTACT WITH LIVE FUZE

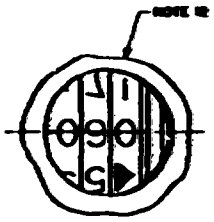

DETAIL A

NOTES:
1 - FOR VIEWS AND NOTES SEE SHEET 2 OF 2.

B	B
SH. 2	SH. 1
REVISION STATUS OF SHEETS	

DODIC: N285

PART NO. 9352381

FUZE, MECHANICAL TIME AND SUPERQUICK, M577A1

9352381

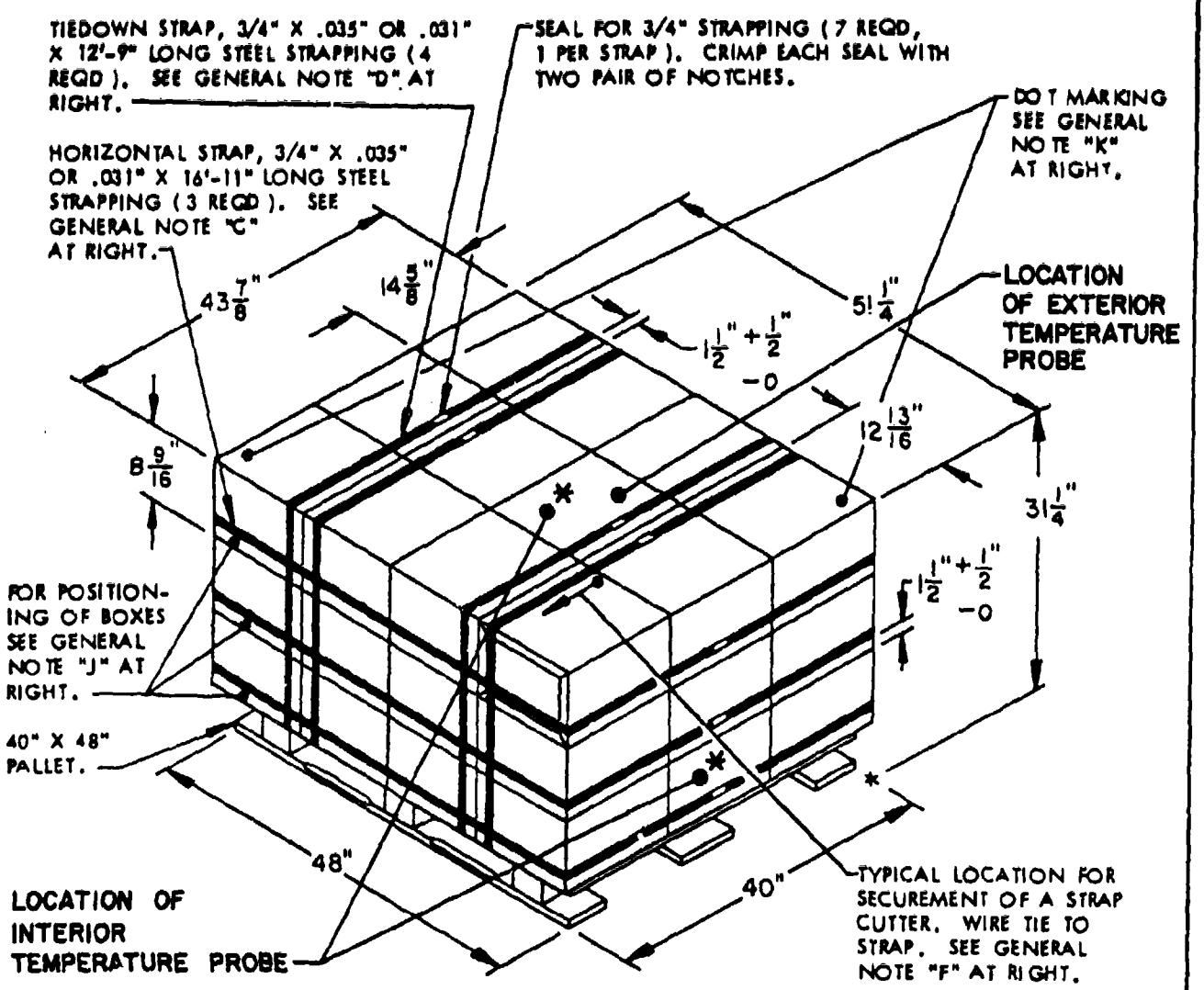

PALLET UNIT A

SEE GENERAL NOTE "B" AT RIGHT.

36 BOXES OF FUZES (16 PER BOX) @ 50 LBS	1,800 LBS (APPROX)
DUNNAGE	8 LBS
PALLET	80 LBS
TOTAL WEIGHT	1,888 LBS (APPROX)
CUBE	40.7 CU FT (APPROX)

*POSITION INTERIOR TEMPERATURE PROBES INSIDE METAL CONTAINERS, BUT NOT IN CONTACT WITH FUZES

DODIC: N464

DRAFTSMAN TRS	TITLE M732 FUZE
TEST ENGINEER	
CHIEF, VALIDATION ENGINEERING DIVISION	U.S. ARMY DEFENSE AMMUNITION CENTER AND SCHOOL, SAVANNA, ILLINOIS 61074-9639

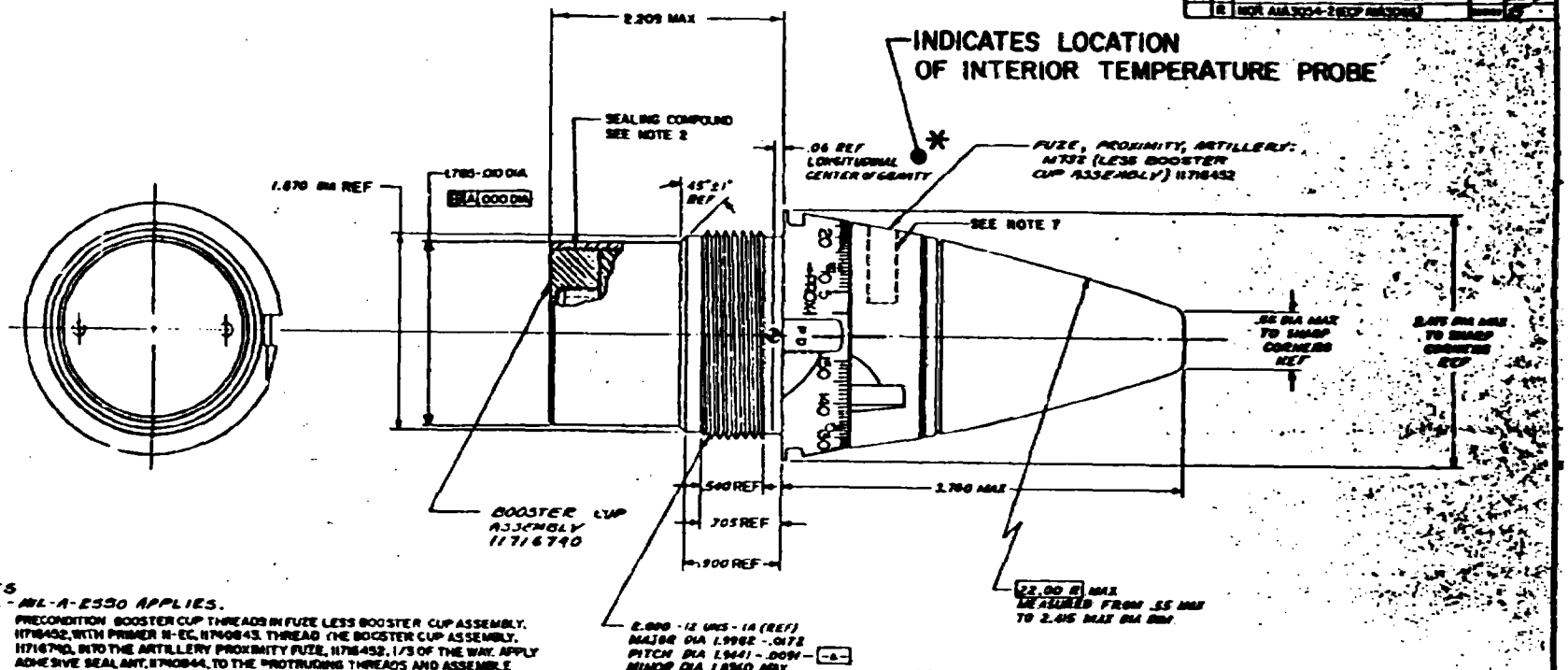

NOTES

1. MIL-A-E550 APPLIES.
2. PRECONDITION BOOSTER CUP THREADS IN FUZE LESS BOOSTER CUP ASSEMBLY, 11716452, WITH PRIMER N-EC, 11740843. THREAD THE BOOSTER CUP ASSEMBLY, 11716740, INTO THE ARTILLERY PROXIMITY FUZE, 11716452, 1/3 OF THE WAY. APPLY ADHESIVE SEAL ANT, 11740844, TO THE PROTRUDING THREADS AND ASSEMBLE WHILE WET. FULLY SEAT THE BOOSTER CUP ASSEMBLY USING A TIGHTENING TORQUE OF 25 TO 35 INCH POUNDS.
3. THIS ITEM MUST COMPLY WITH ALL REQUIREMENTS SET FORTH IN MIL-F-48706.
4. FOR PARTS LIST, SEE PL 11716451.
5. FOR INTERCONNECTION WIRING DIAGRAM, SEE 11732922.
6. FUZE WEIGHT IS 1.75 ±.05 LBS.
7. LOCATION FOR INK MARKING OF AMMUNITION LOT NUMBER BY LAP FACILITY IN ACCORDANCE WITH MIL-STD-1168.

* DO NOT POSITION INTERIOR TEMPERATURE PROBE IN CONTACT WITH FUZE BODY

DODIC: N464

PART NO. 11716451

3 SEPT 1970

FUZE, PROXIMITY: ARTILLERY, M732 (LOADED)

D 10202 11716451

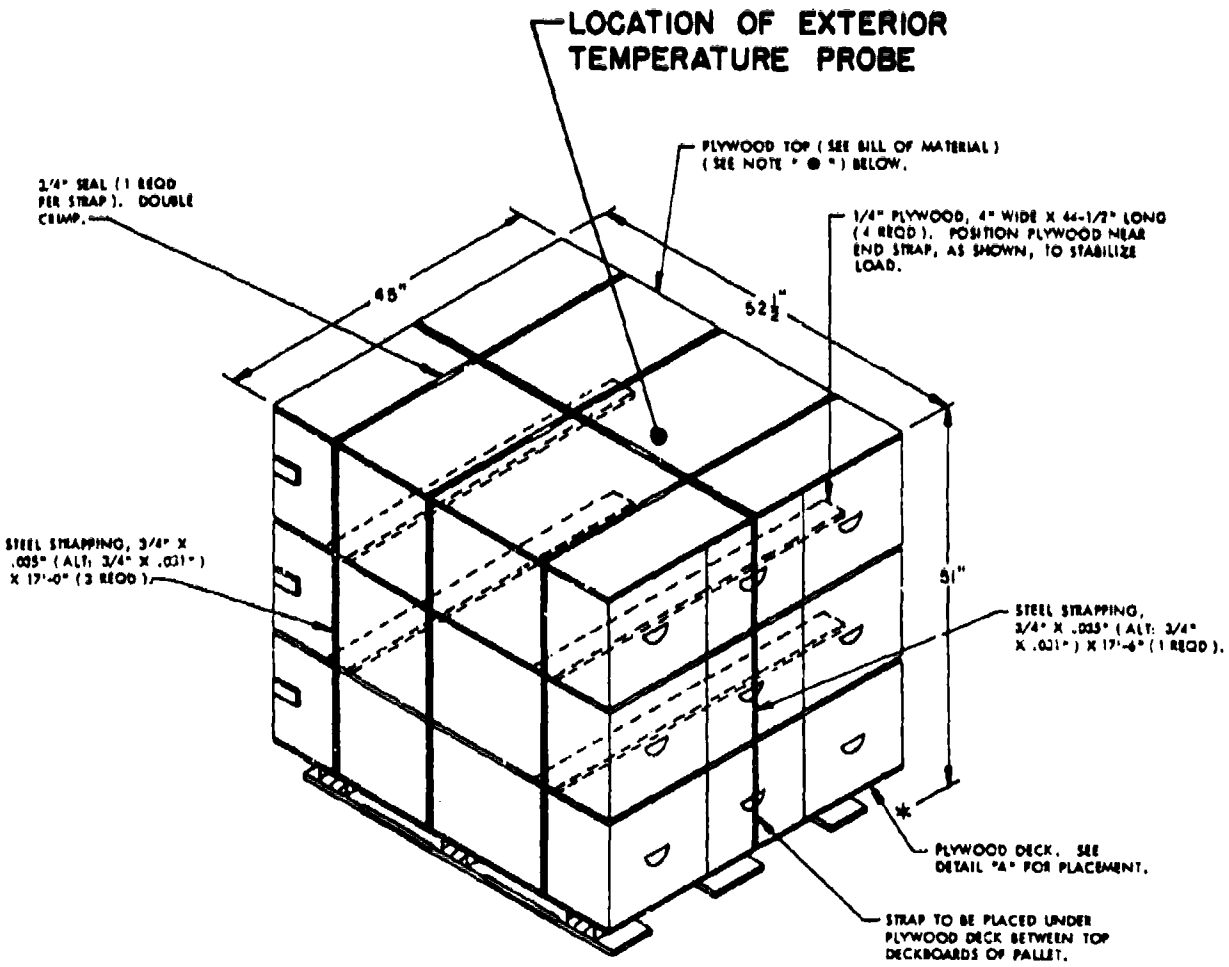

UNIT ASSEMBLY

DODIC: PA45

DRAFTSMAN TRS	TITLE SHILLELAGH MISSILES
TEST ENGINEER	
CHIEF, VALIDATION ENGINEERING DIVISION	U.S. ARMY DEFENSE AMMUNITION CENTER AND SCHOOL, SAVANNA, ILLINOIS 61074-9639

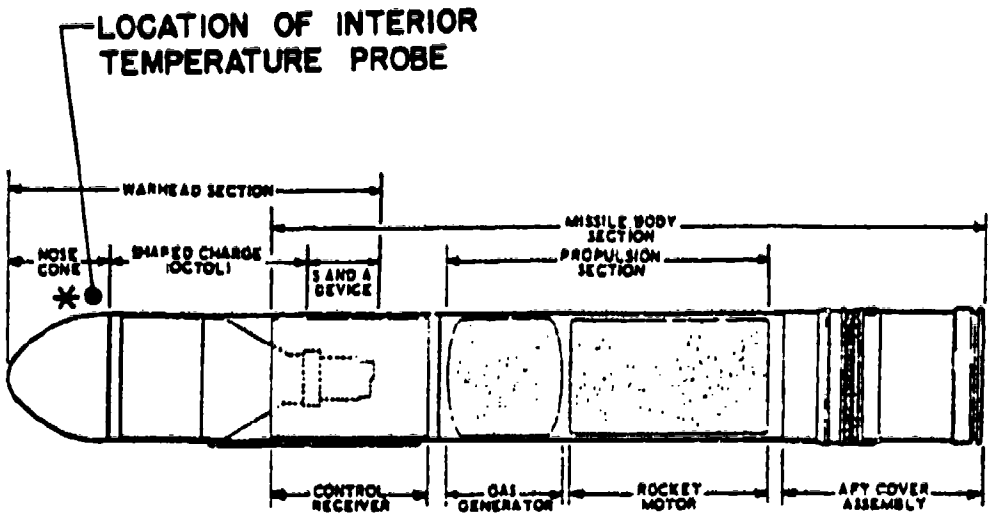

Figure 1-2. SHILLELAGH missile MGM-51A, MGM-51B, or MGM-51C - cutaway view.

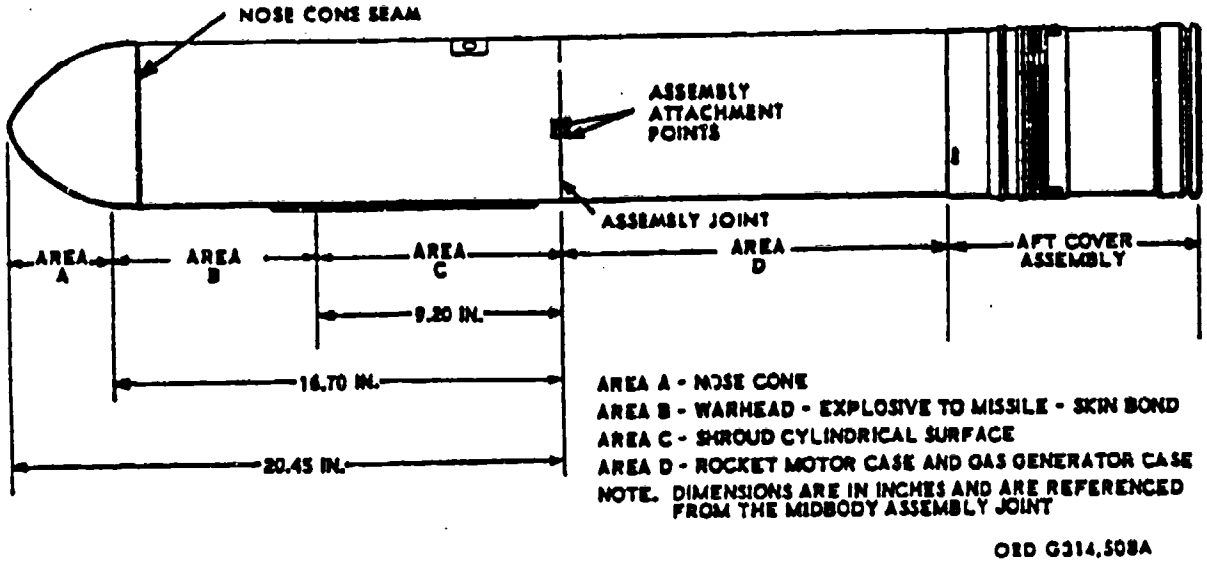

Figure 1. Missile inspection areas.

*POSITION PROBE INSIDE CONTAINER, BUT NOT IN DIRECT CONTACT WITH MISSILE.

DODIC: PA45

DRAFTSMAN TRS	TITLE SHILLELAGH MISSILE
TEST ENGINEER	
CHIEF, VALIDATION ENGINEERING DIVISION	U.S. ARMY DEFENSE AMMUNITION CENTER AND SCHOOL, SAVANNA, ILLINOIS 61074-9639

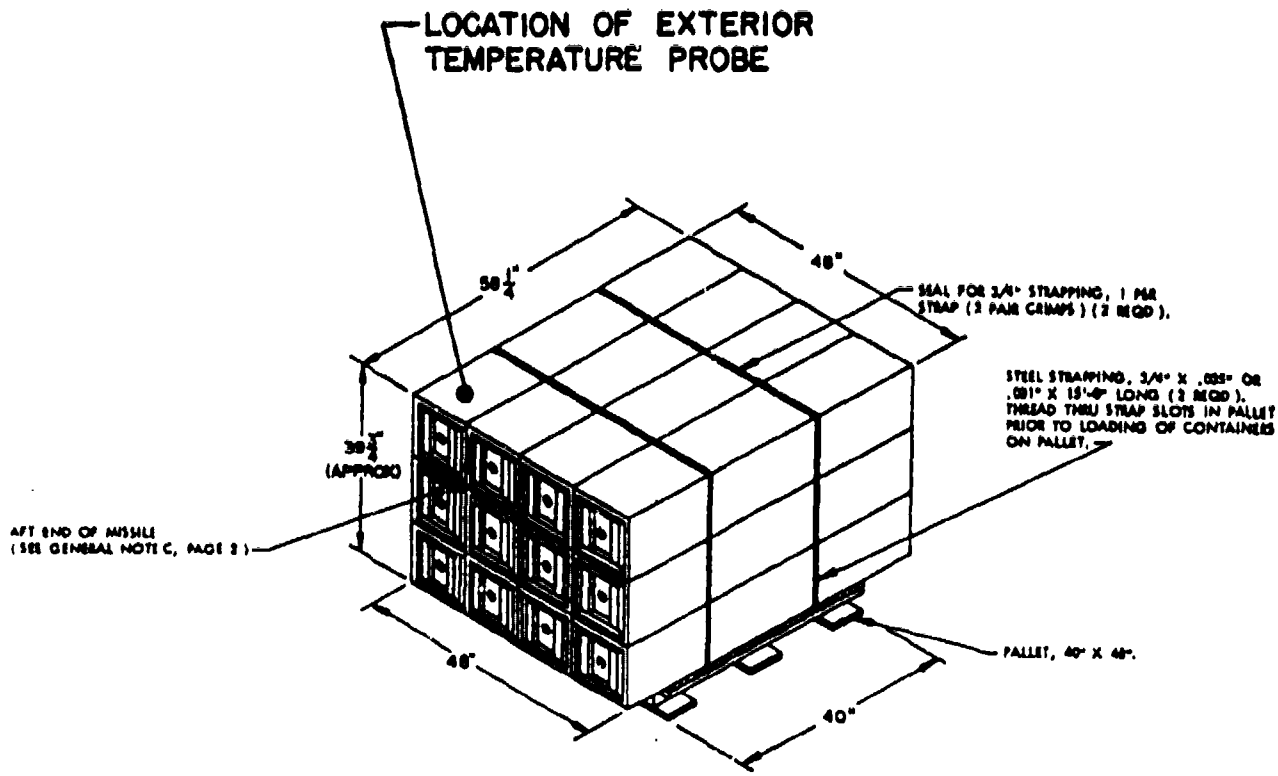

PALLET UNIT

12 BOXES OF TOW MISSILE (1 PER BOX) -- 87 LBS	1,044 LBS (APPROX)
DUNNAGE	3 LBS
PALLET	80 LBS
TOTAL WEIGHT	1,127 LBS (APPROX)
CUBE	64.3 CU FT (APPROX)

DODIC: PB93

DRAFTSMAN TRS	TITLE TOW2/TOW2A/ITOW
TEST ENGINEER	
CHIEF, VALIDATION ENGINEERING DIVISION	U.S. ARMY DEFENSE AMMUNITION CENTER AND SCHOOL, SAVANNA, ILLINOIS 61074-9639

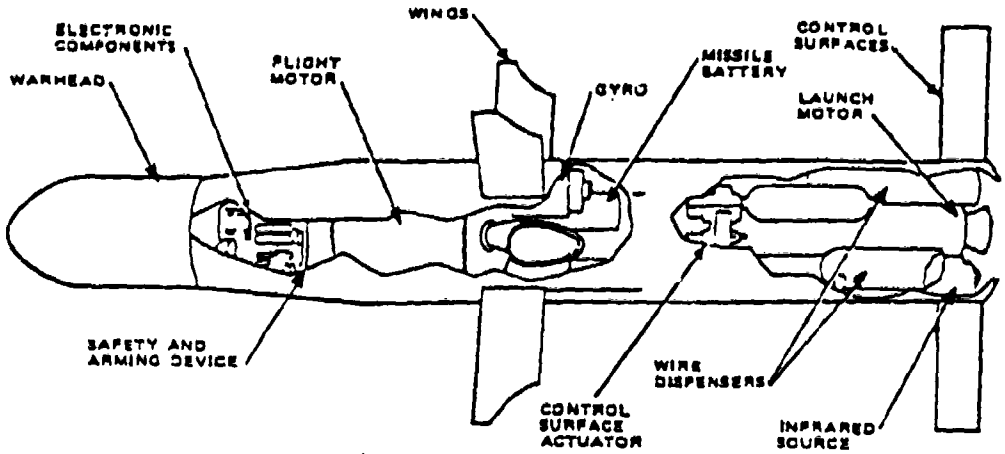

BGM-71A, BGM-71A-1, BGM-71A-2, BGM-71A-2A, BGM-71A-3, OR BGM-71A-3A

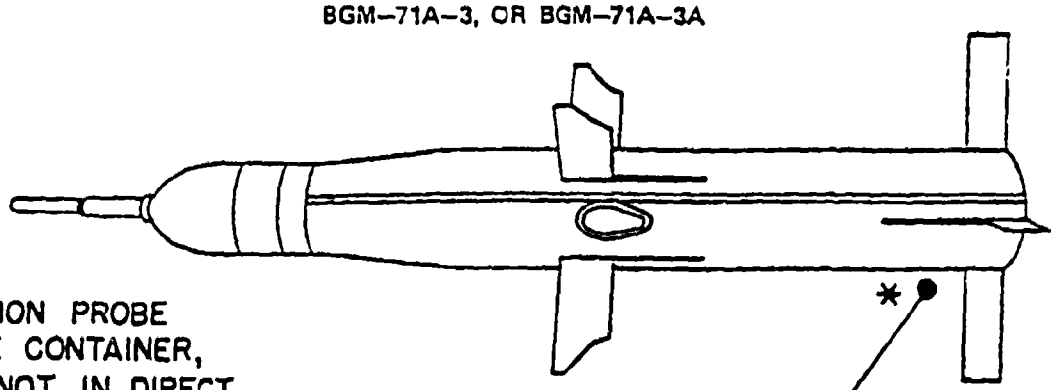

* POSITION PROBE INSIDE CONTAINER, BUT NOT IN DIRECT CONTACT WITH MISSILE.

BGM-71C, BGM-71C-1, OR BGM-71C-1A

* LOCATION OF INTERIOR TEMPERRATURE PROBE

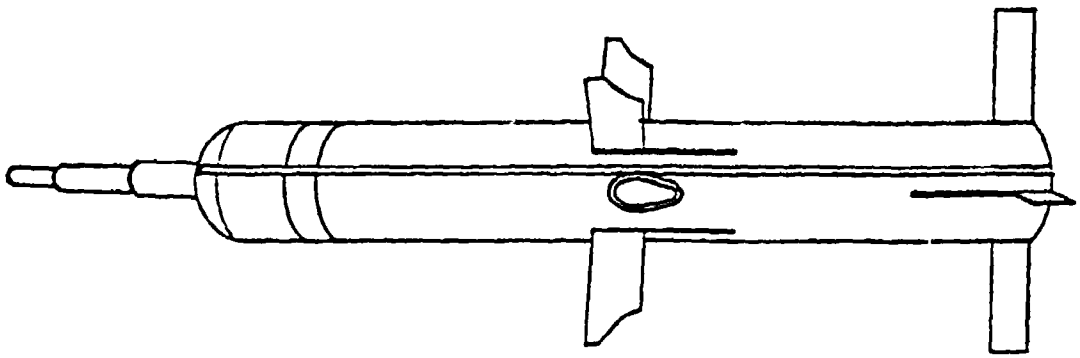

BGM-71D OR BGM-71E

MI 1064648

TOW MISSILES

DODIC: PB93

DRAFTSMAN TRS	TITLE TOW MISSILES
TEST ENGINEER	
CHIEF, VALIDATION ENGINEERING DIVISION	U.S. ARMY DEFENSE AMMUNITION CENTER AND SCHOOL, SAVANNA, ILLINOIS 61074-9639

PART 8

TEMPERATURE DATA GRAPHS

Daily Peak Environmental Data From Campbell Logger #1 at TSA 1
Date: June 4 - July 16, 1991

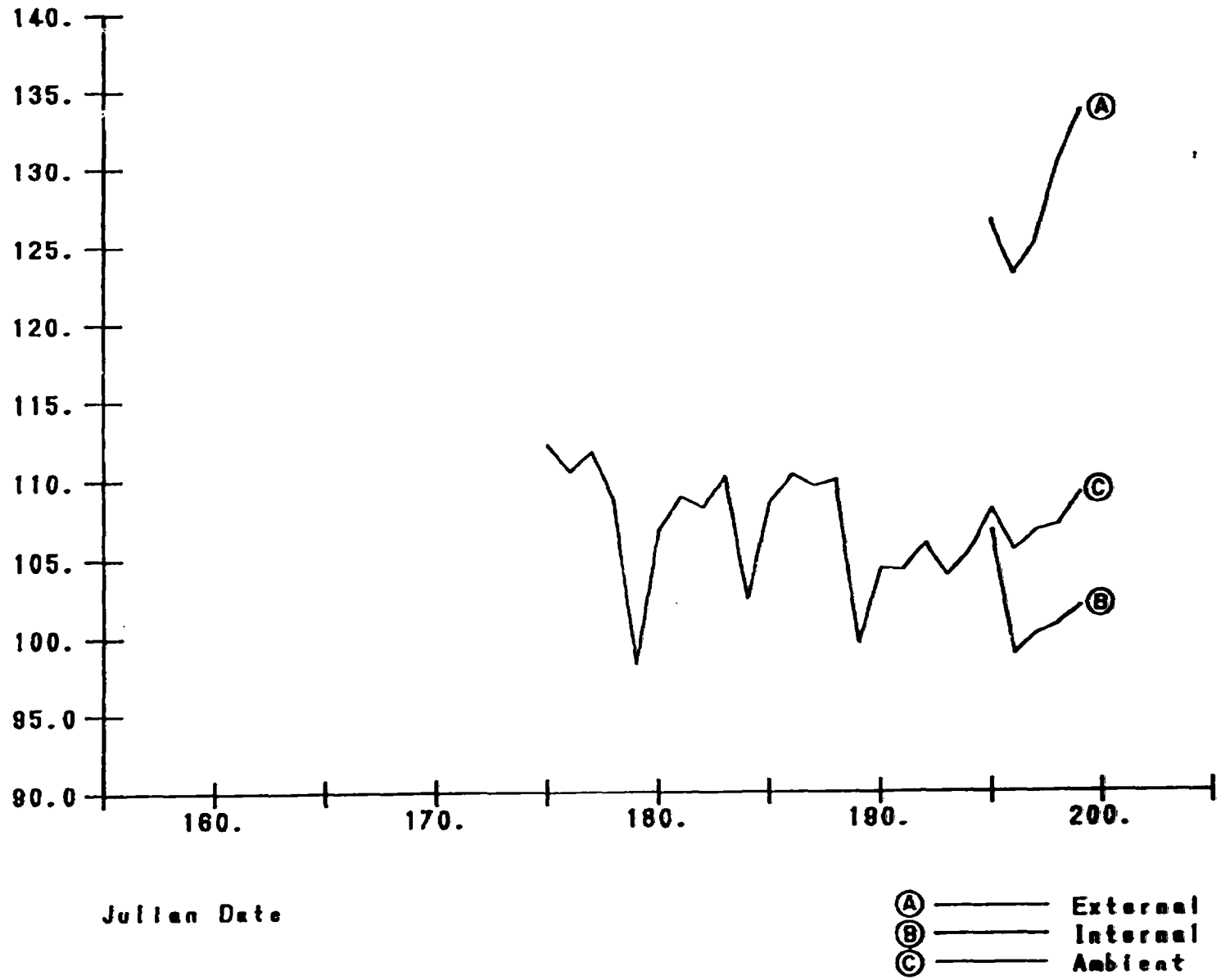

ITEM: CTG, 60MM ILLUM M83A3
DODIC: B627, LOT #: LOW-69-64
Degrees Fahrenheit

Daily Peak Environmental Data From Campbell Logger #1 at TSA 1
Date: July 18 - September 1, 1991

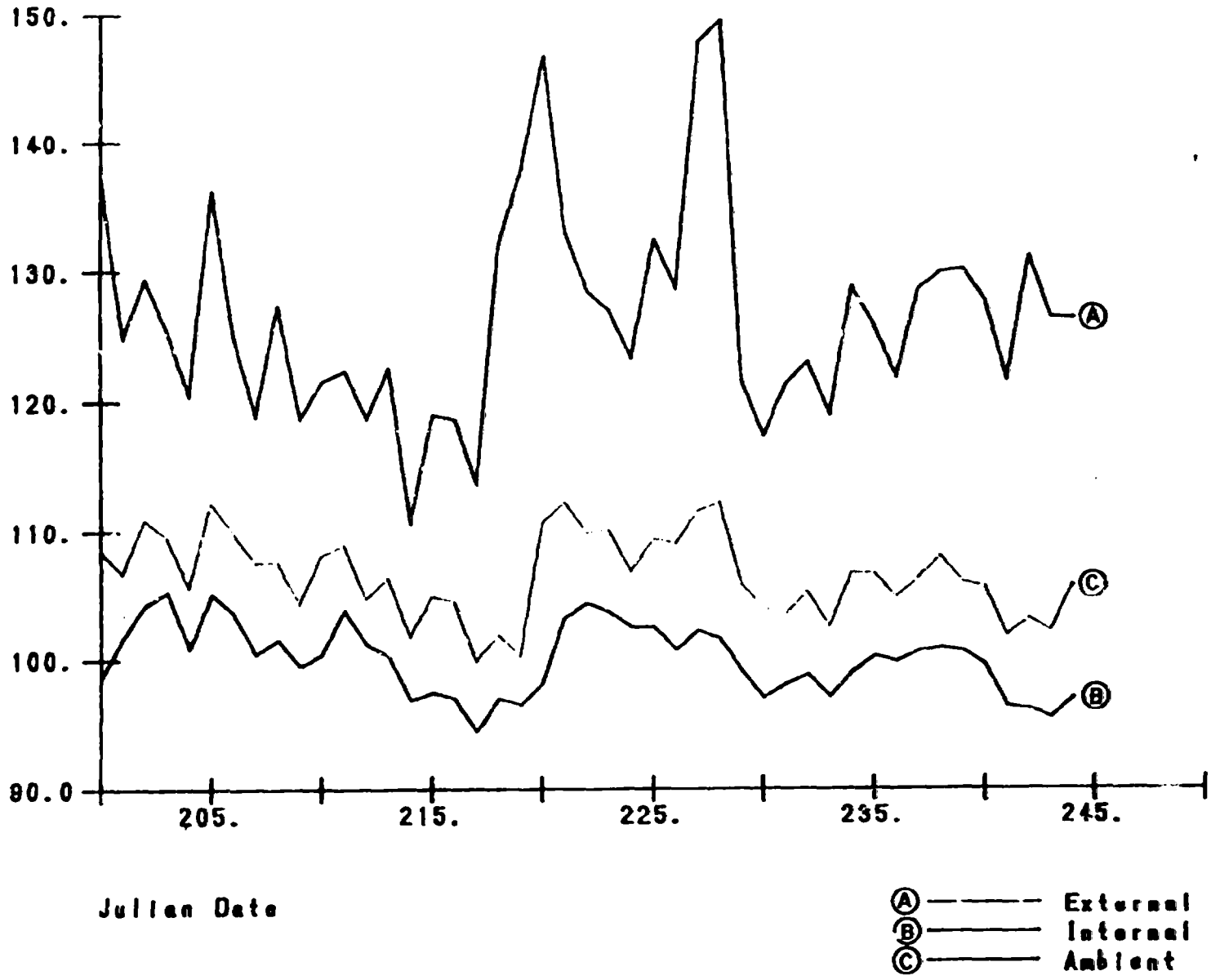

ITEM: CTG, 50MM ILLUM M83A3
DODIC: B827, LOT #: LOW-89-84
Degrees Fahrenheit

Daily Peak Environmental Data From Campbell Logger #1 at TSA 1
Date: September 2 - October 1, 1991

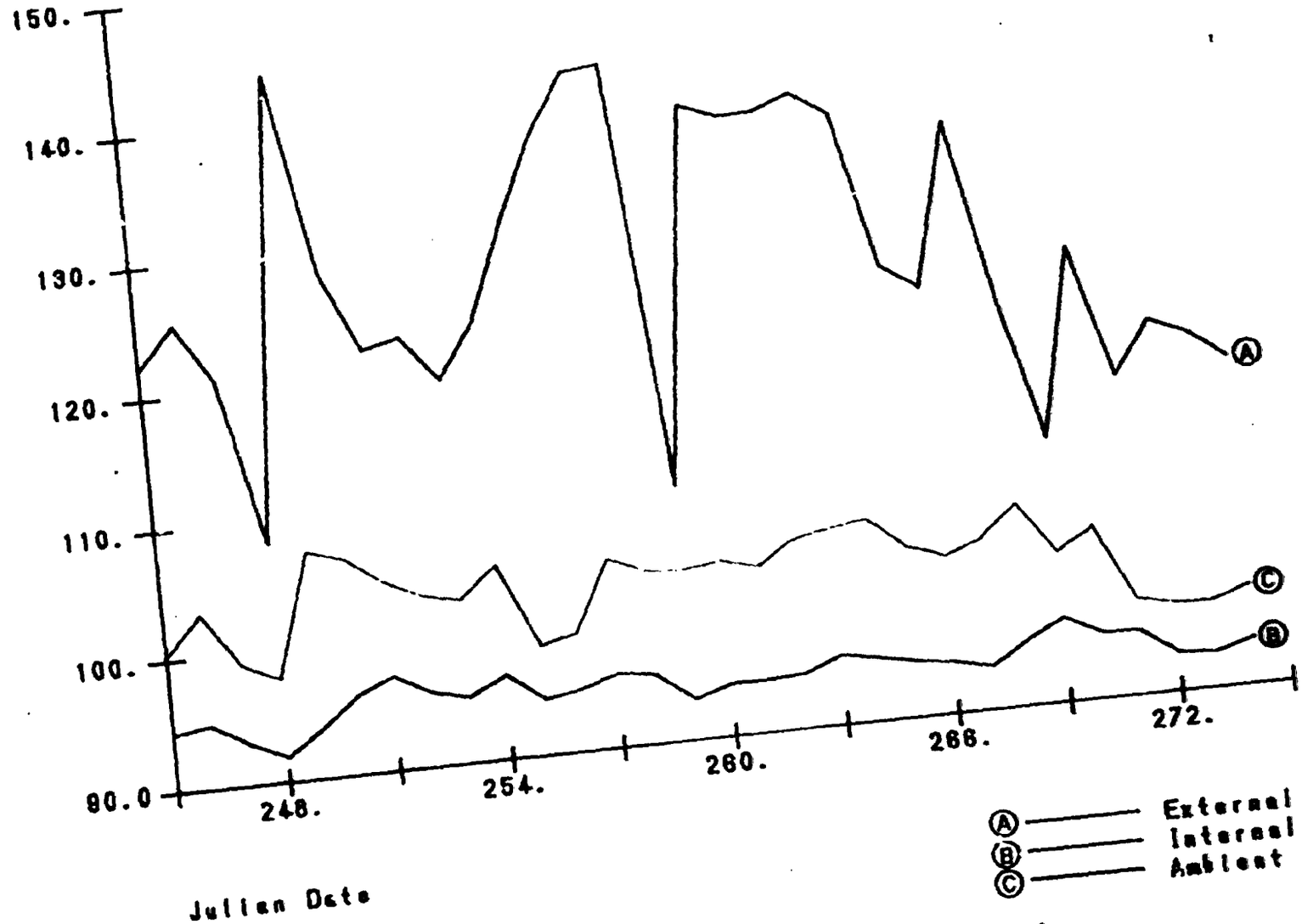

ITEM: CTG. 80MM ILLUM M83A3
DODIC: BB27, LOT #: LOW-89-84
Degrees Fahrenheit

Daily Peak Environmental Data From Campbell Logger #1 at TSA 1
Date: June 4 - July 18, 1991

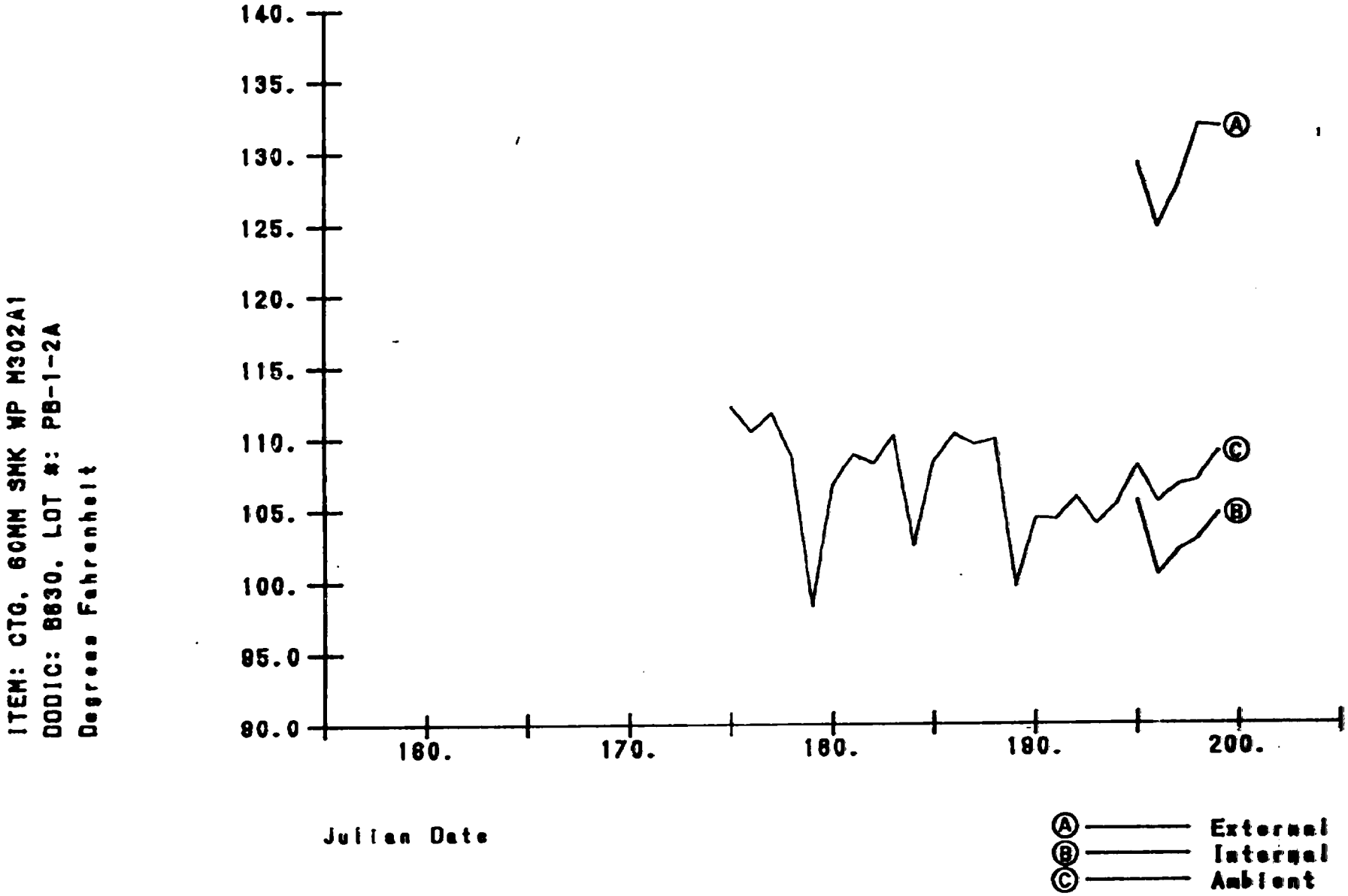

Daily Peak Environmental Data From Campbell Logger #1 at TSA 1
Date: July 19 - September 1, 1991

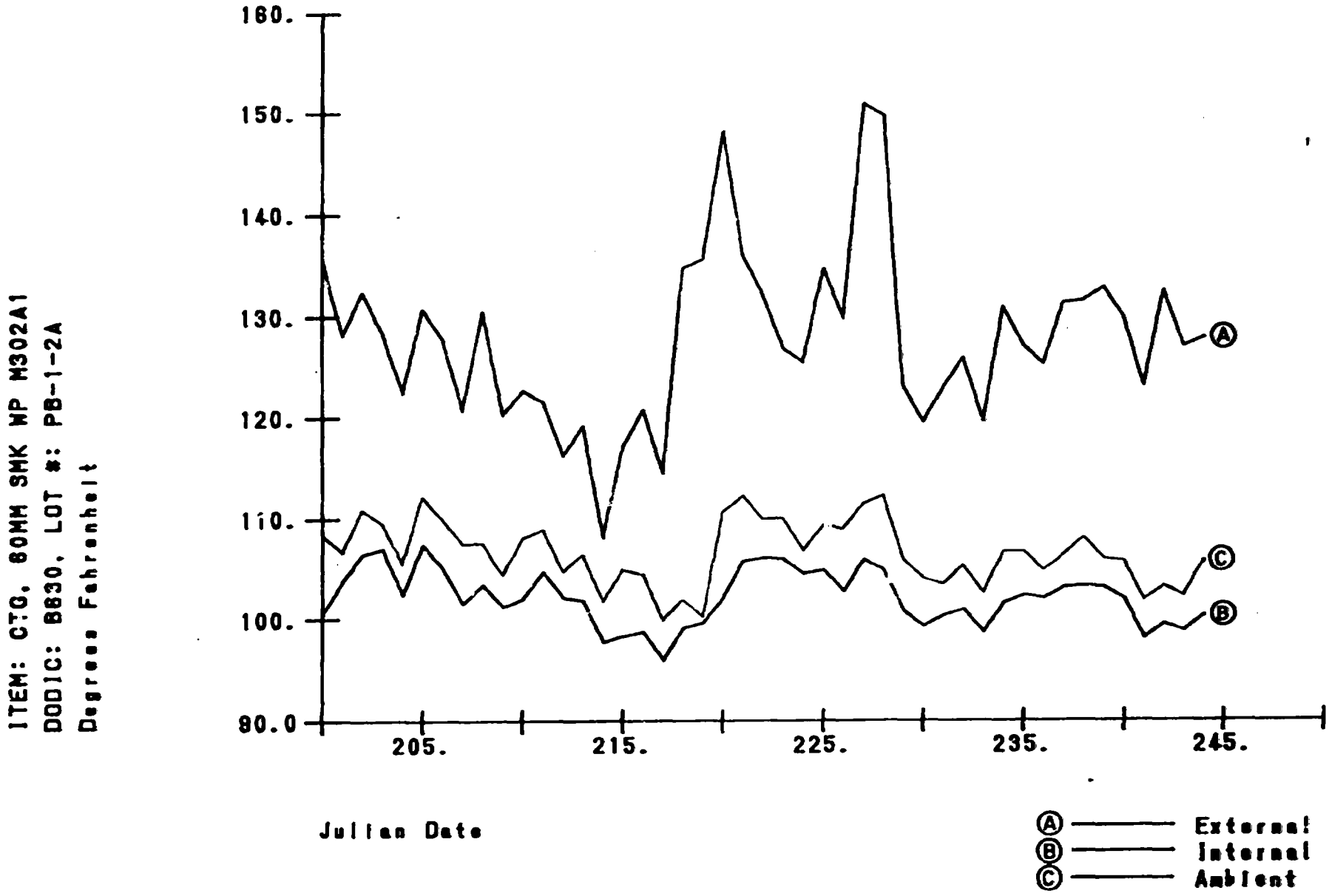

Daily Peak Environmental Data From Campbell Logger #1 at TSA 1
Date: September 2 - October 1, 1991

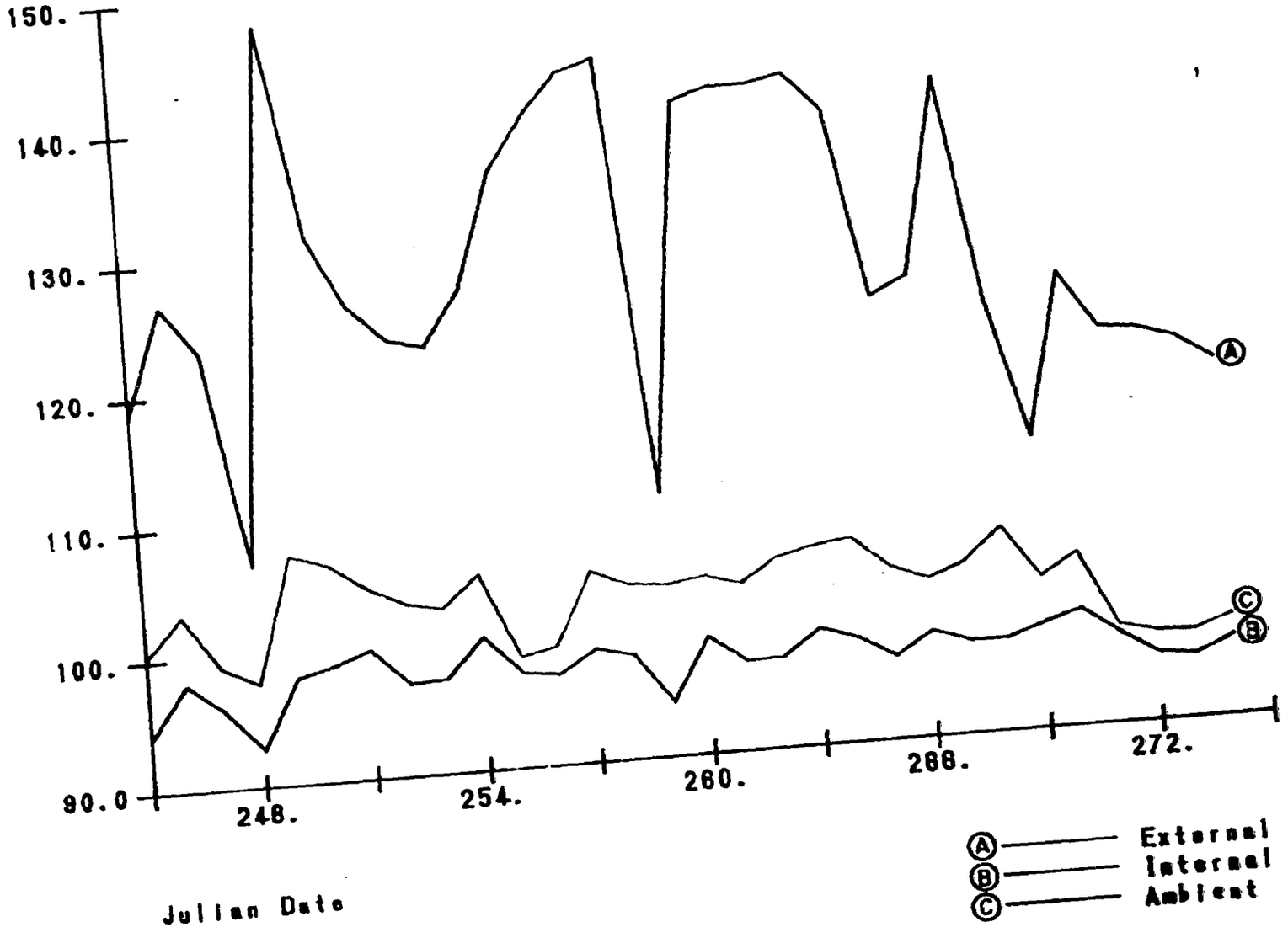

ITEM: CTG, BOMM SMK WP M302A1
DODIC: B630, LOT #: PB-1-2A
Degrees Fahrenheit

Daily Peak Environmental Data From Campbell Logger #1 at TSA 1
Date: June 4 - July 18, 1991

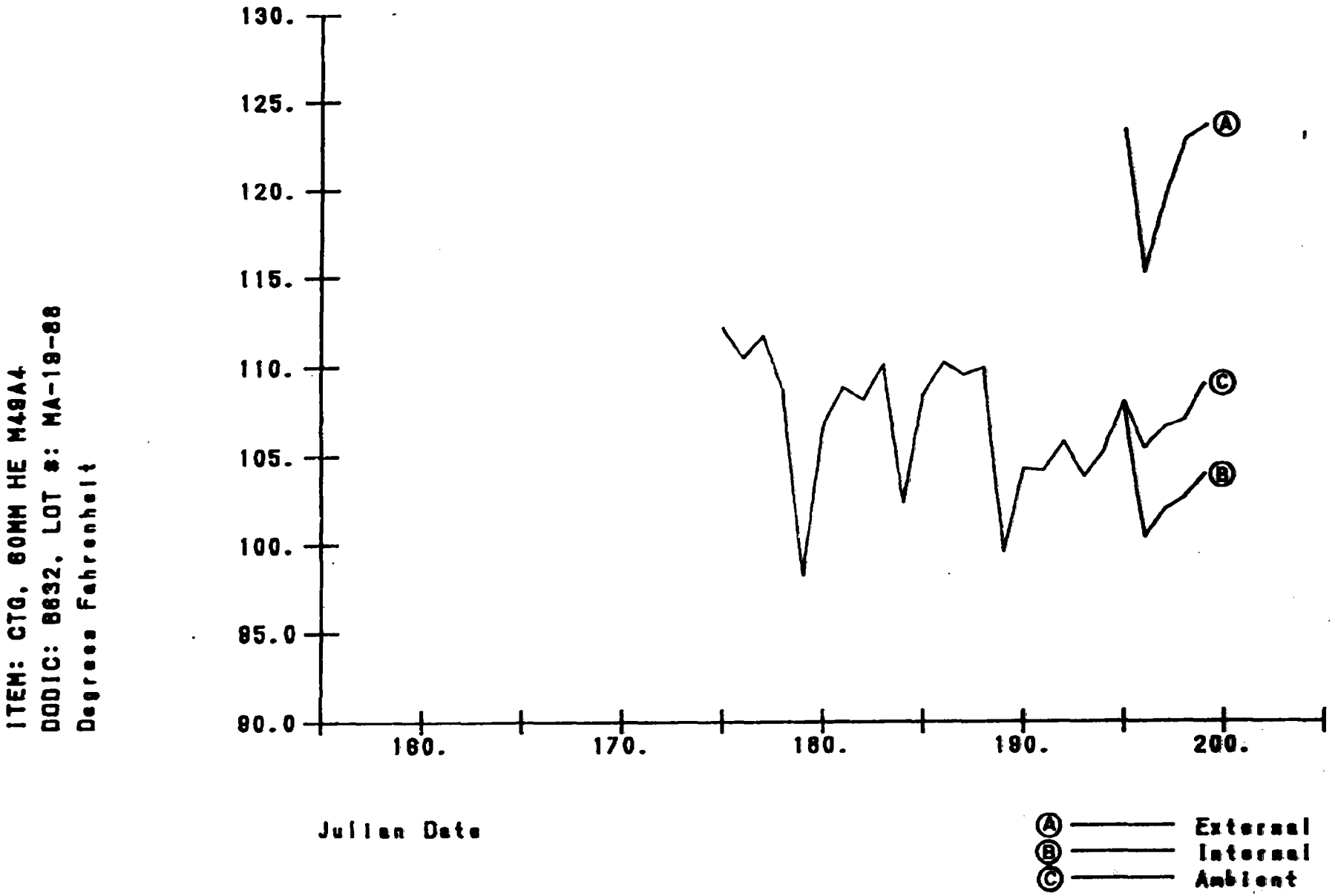

Daily Peak Environmental Data From Campbell Logger #1 at TSA 1
Date: July 19 - September 1, 1991

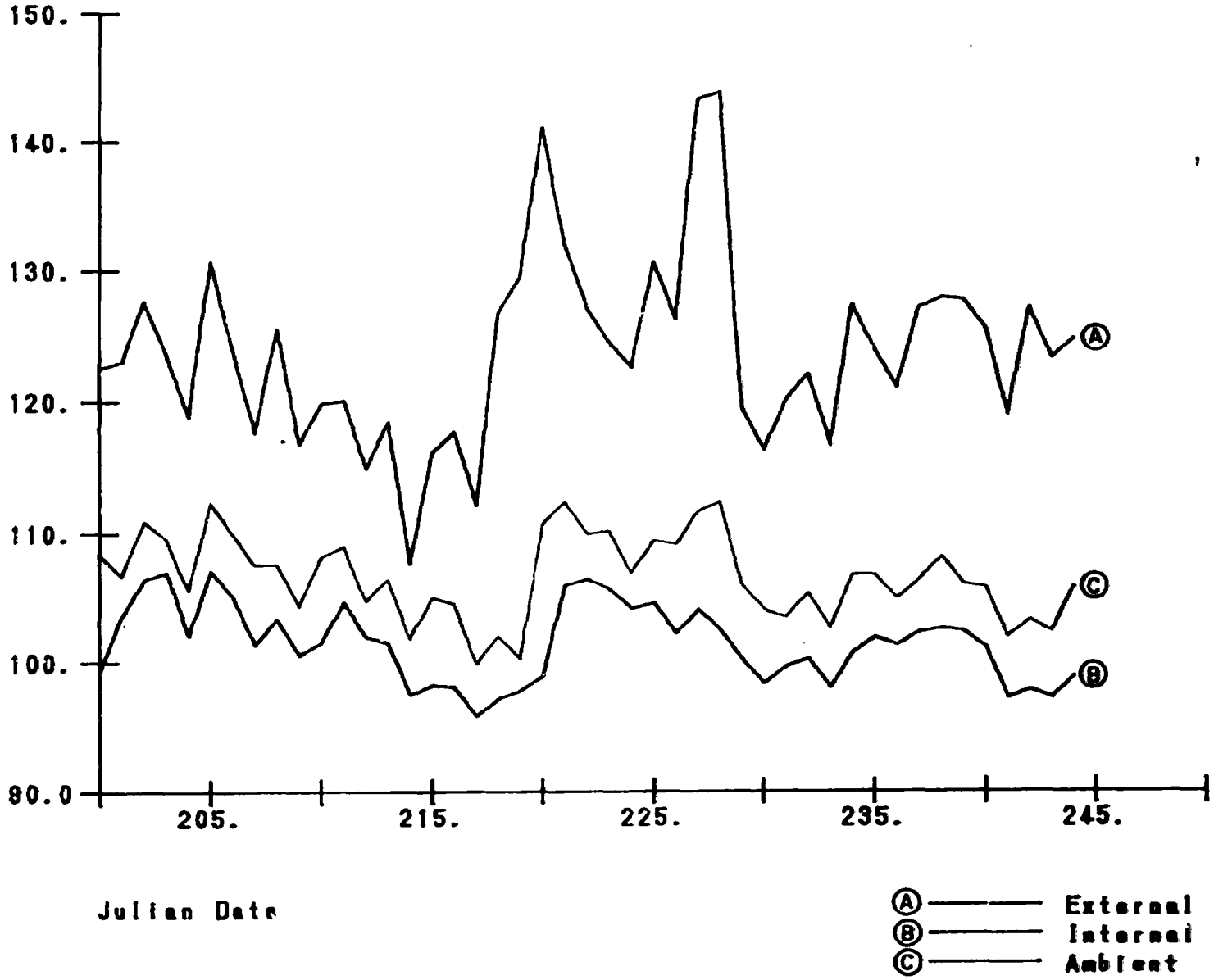

ITEM: CTG. 80MM HE M49A4
DODIC: B832, LOT #: MA-19-88
Degrees Fahrenheit

Daily Peak Environmental Data From Campbell Logger #1 at TSA 1
Date: September 2 - October 1, 1981

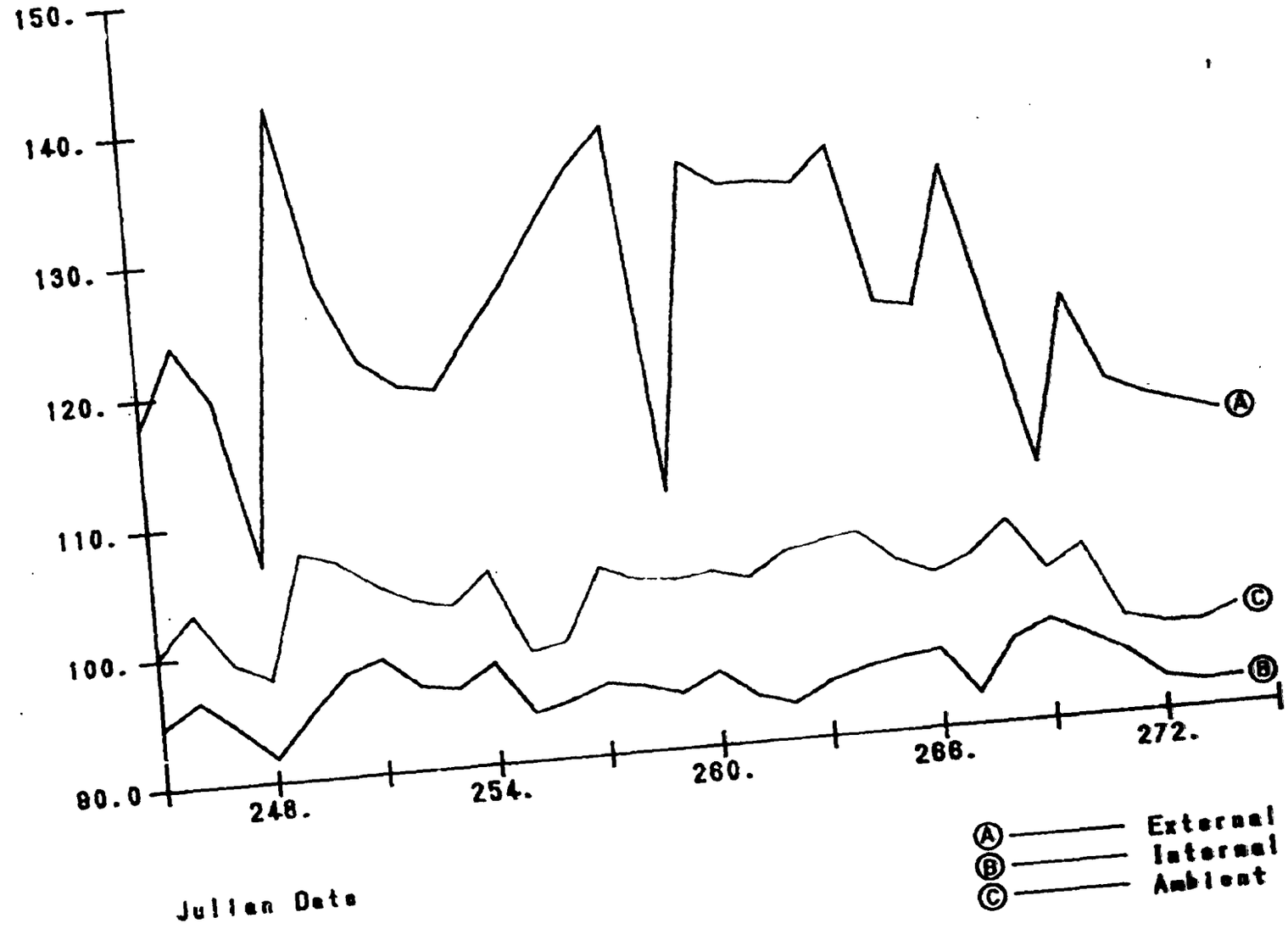

ITEM: CTG, 60MM HE M49A4
DODIC: BB32, LOT #: MA-19-88
Degrees Fahrenheit

Daily Peak Environmental Data From Campbell Logger #1 at TSA 1
Date: June 4 - July 18, 1991

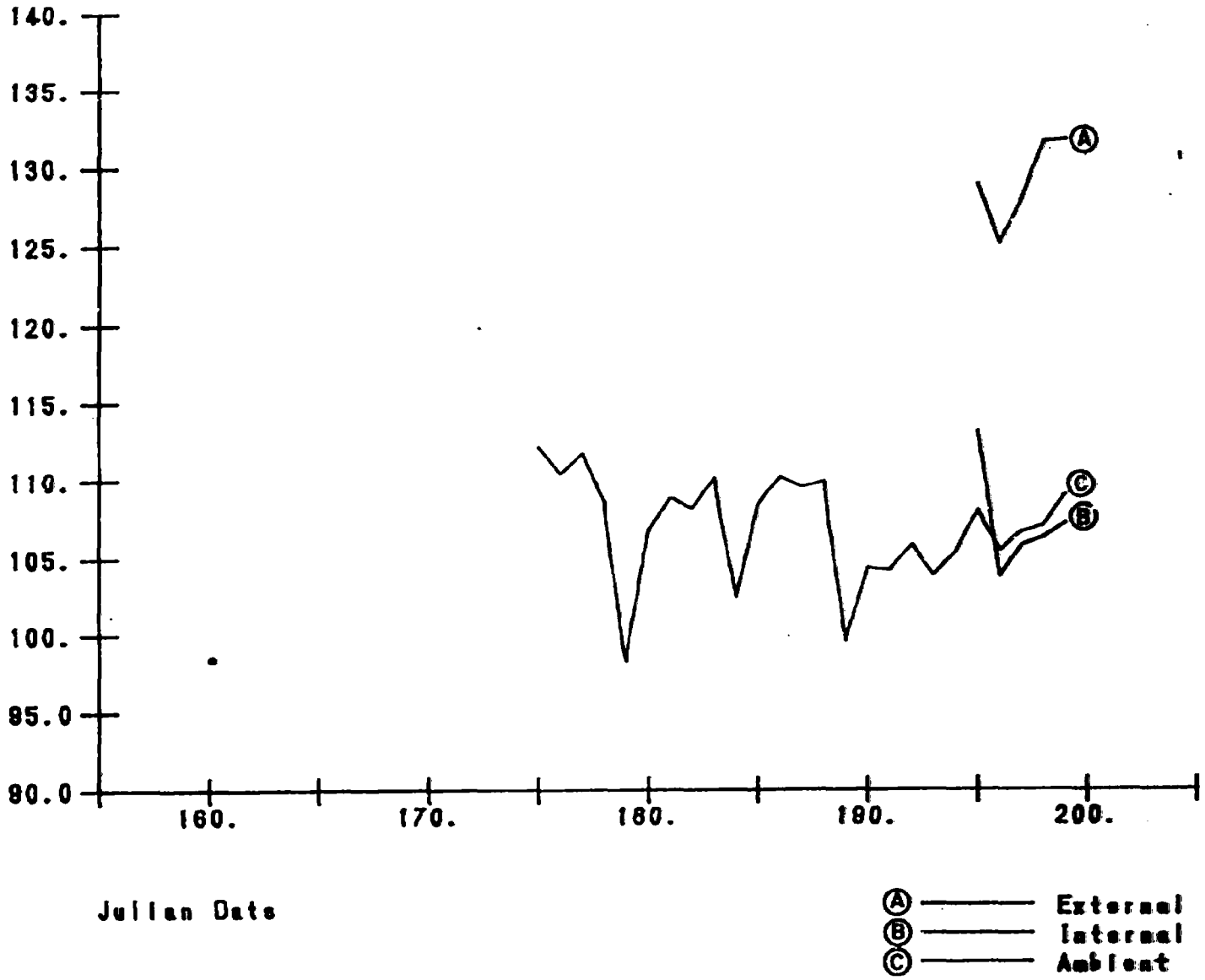

ITEM: CTG, 80MM HE M720
DODIC: B842, LOT #: MA-88M030-001
Degrees Fahrenheit

Daily Peak Environmental Data From Campbell Logger #1 at TSA 1
Date: July 18 - September 1, 1991

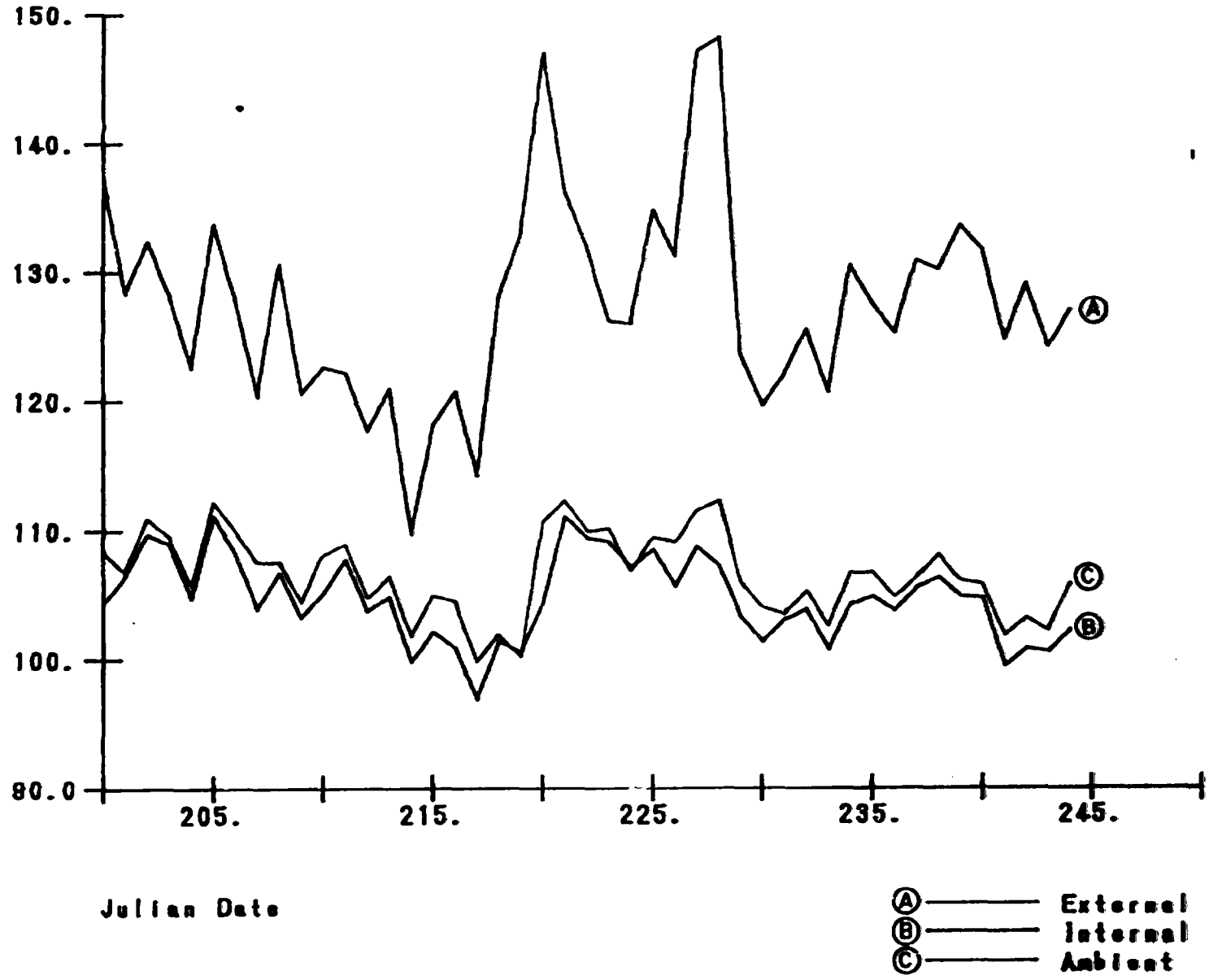

ITEM: CTG, 80MM HE M720
DODIC: B842, LOT #: MA-88M030-001
Degrees Fahrenheit

Daily Peak Environmental Data From Campbell Logger #1 at TSA 1
Date: September 2 - October 1, 1991

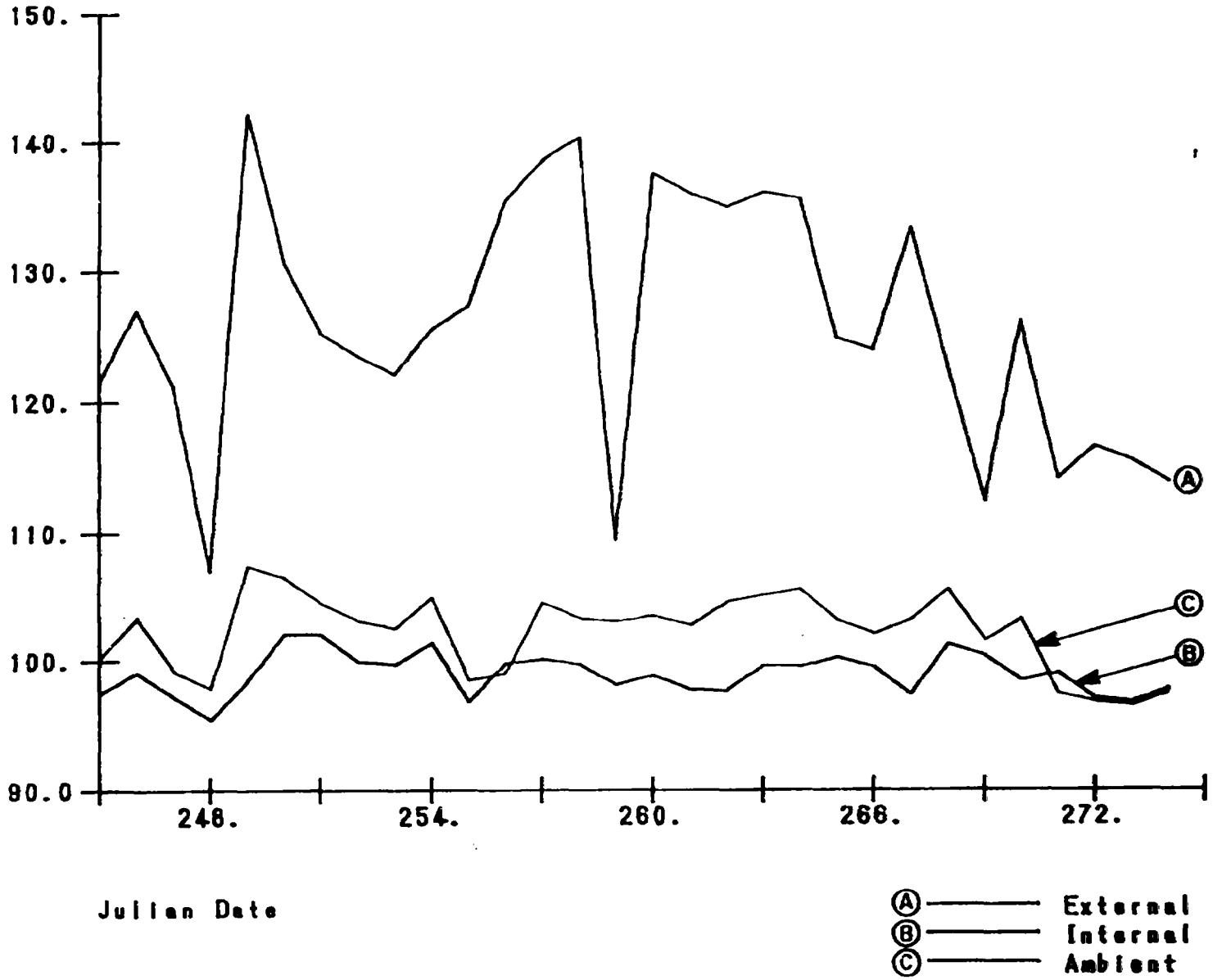

ITEM: CTG, 60MM HE M720
DODIC: B842, LOT #: MA-88M030-001
Degrees Fahrenheit

Daily Peak Environmental Data From Campbell Logger #1 at TSA 1
Date: June 4 - July 18, 1991

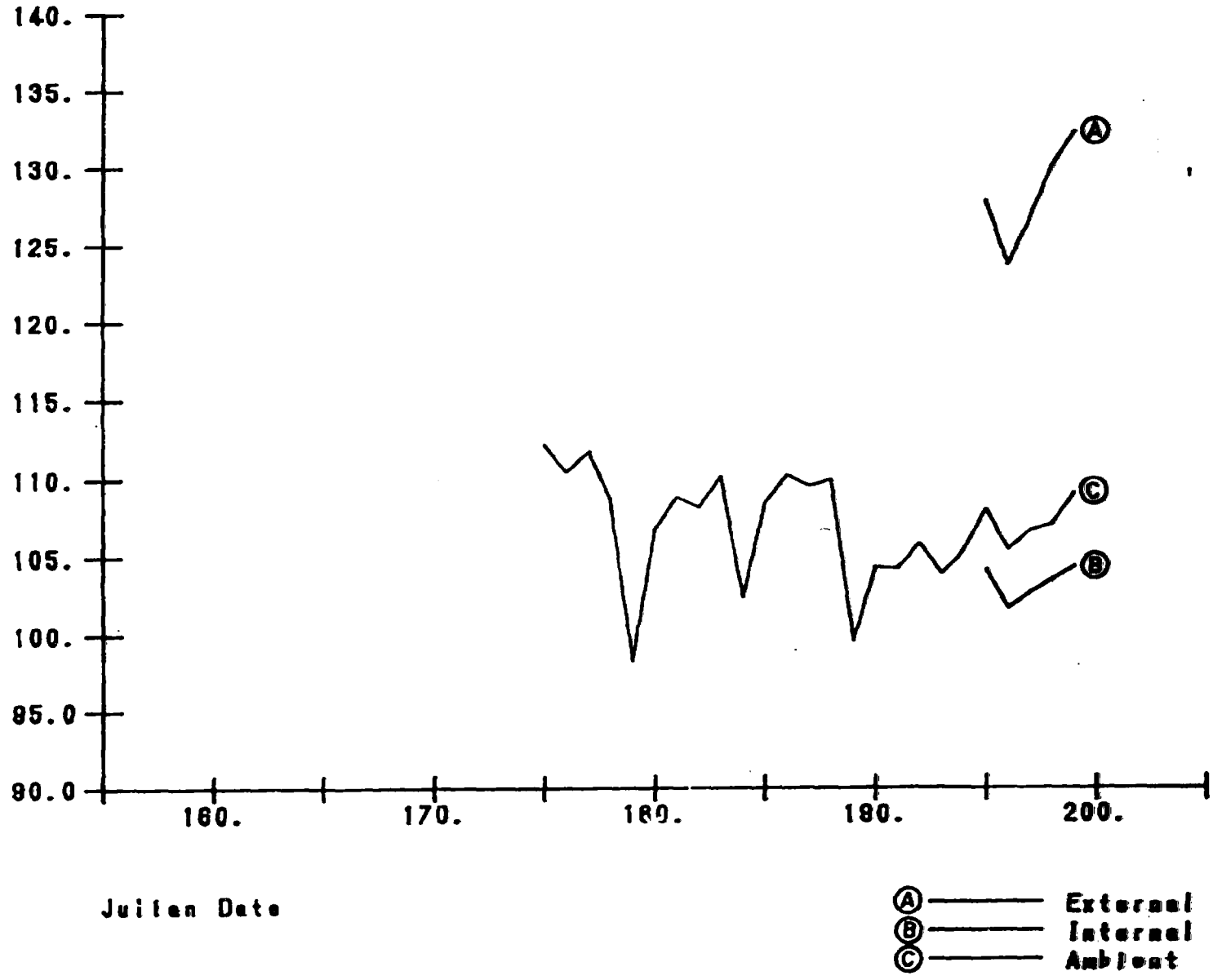

ITEM: CTG, 81MM ILLUM M301A3
DODIC: C226, LOT #: LOW-88-12
Degrees Fahrenheit

Daily Peak Environmental Data From Campbell Logger #1 at TSA 1
Date: July 19 - September 1, 1991

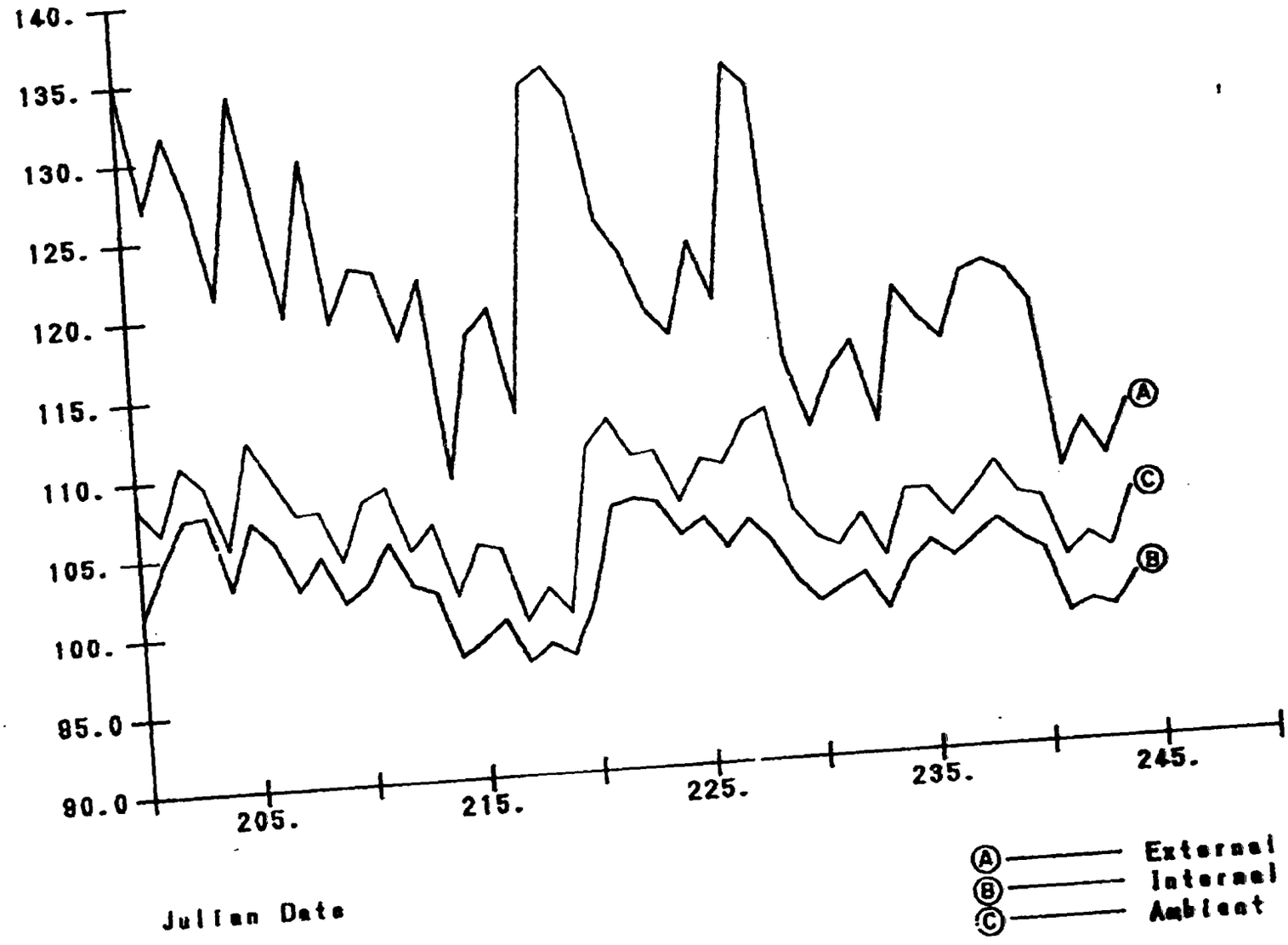

ITEM: CTG, 81MM ILLUM M301A3
DODIC: C228, LOT #: LOW-88-12
Degrees Fahrenheit

Daily Peak Environmental Data From Campbell Logger #1 at TSA :
Date: September 2 - October 1, 1991

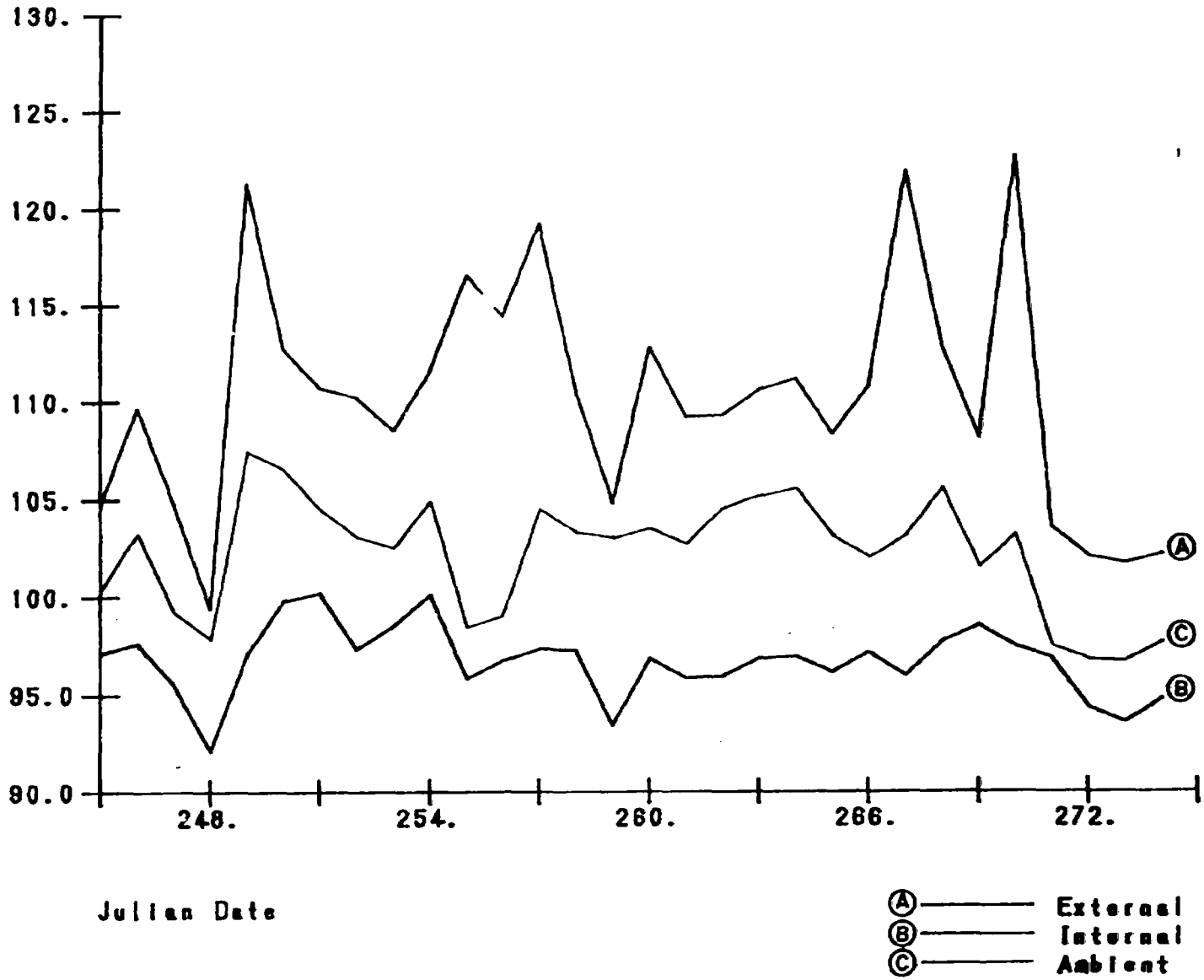

ITEM: CTG, 81MM ILLUM M301A3
DODIC: C226, LOT #: LOW-89-12
Degrees Fahrenheit

Daily Peak Environmental Data From Weather Station #2 at TSA 1
Date: April 20 - June 3, 1991

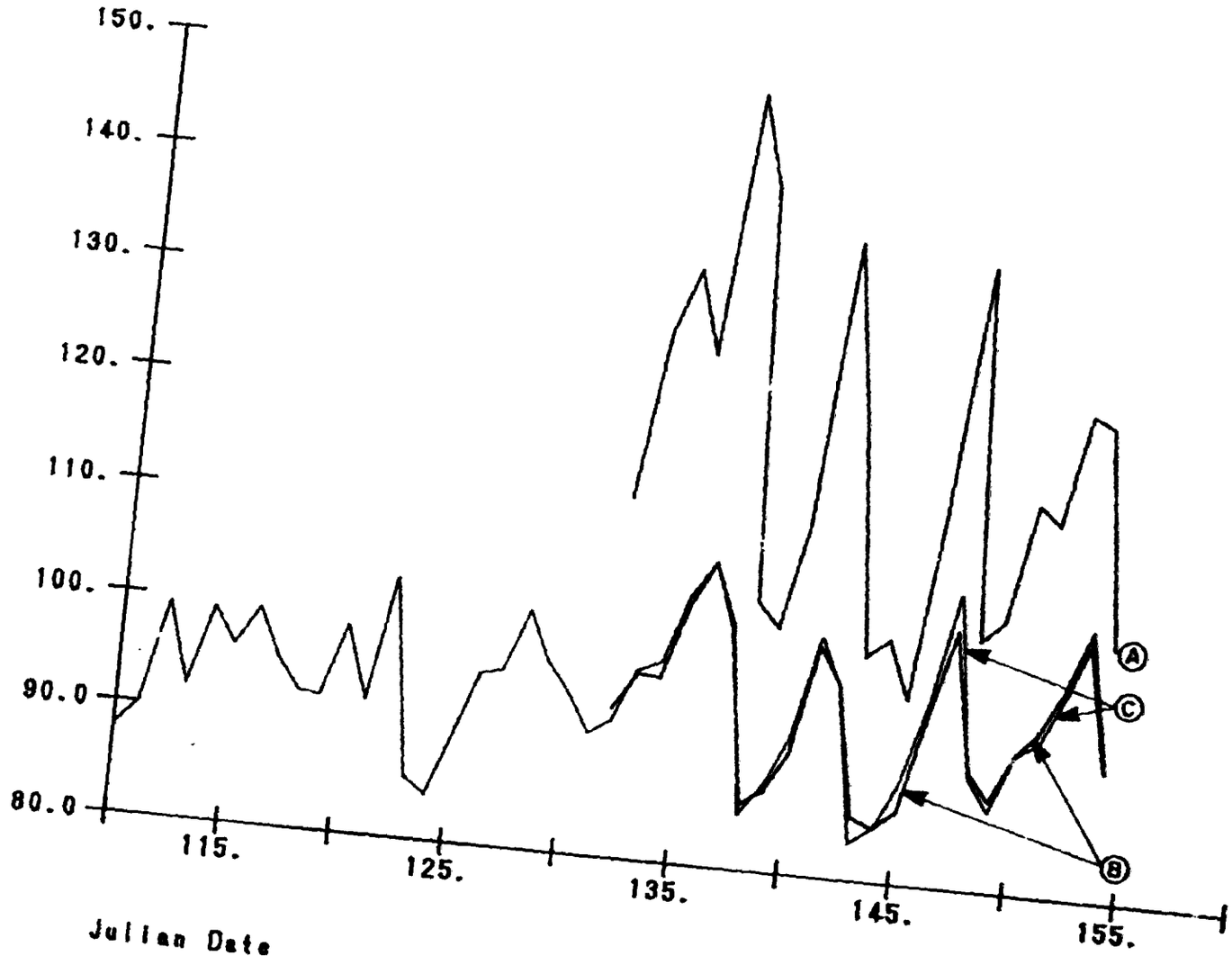

A — External
B — Internal
C — Ambient

ITEM: CTG, 120MM APFSDS-T M829A1
DODIC: C380, LOT #: MHM90D094-005
Degrees Fahrenheit

Daily Peak Environmental Data From Weather Station #2 at TSA 1
Date: June 4 - July 18, 1991

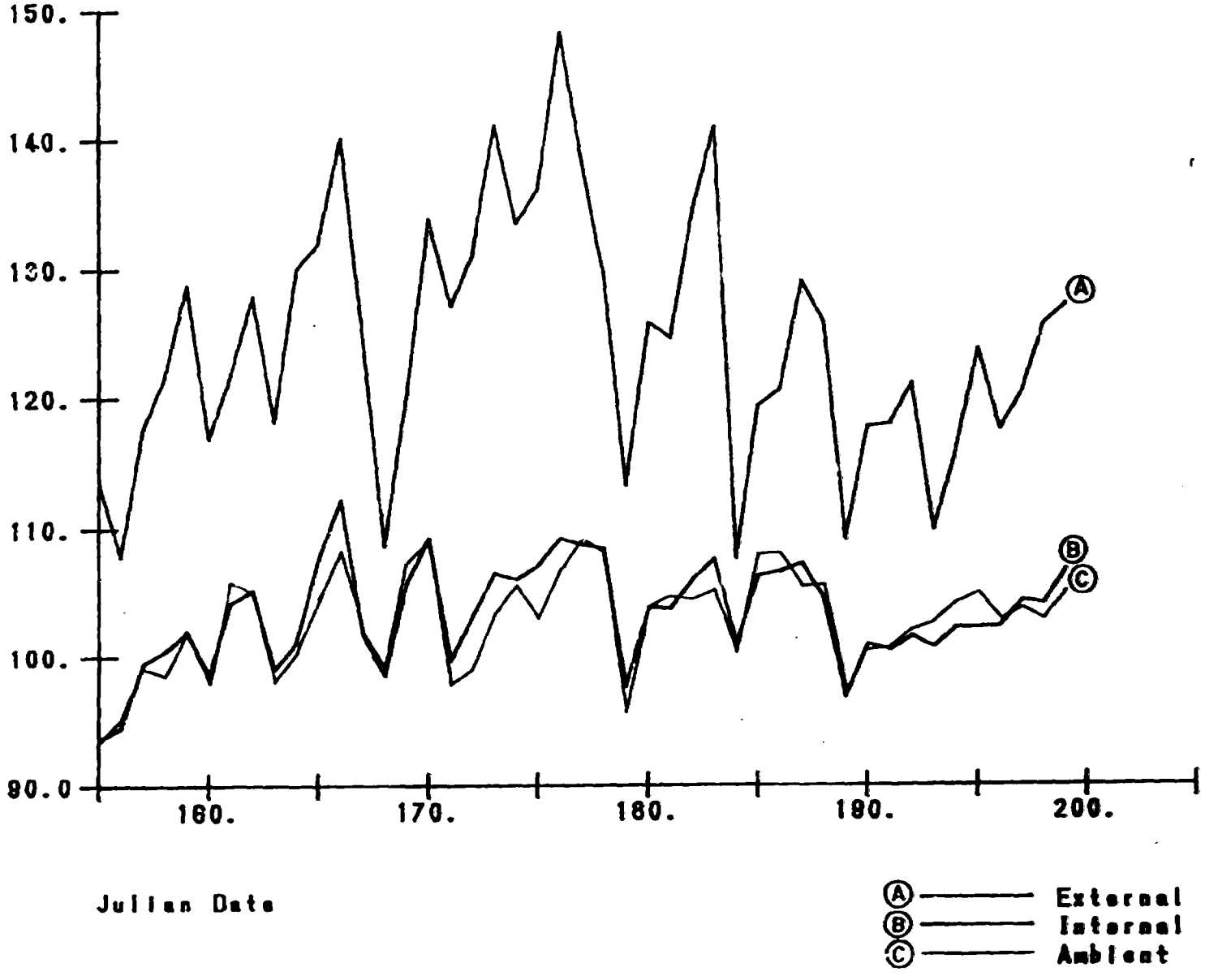

ITEM: CTG, 120MM APFSDS-T M828A1
DODIC: C380, LOT #: MHM90D094-0C5

Daily Peak Environmental Data From Weather Station #2 at TSA 1
Date: July 18 - September 1, 1991

Daily Peak Environmental Data From Weather Station #2 at TSA 1
Date: September 2 - October 1, 1991

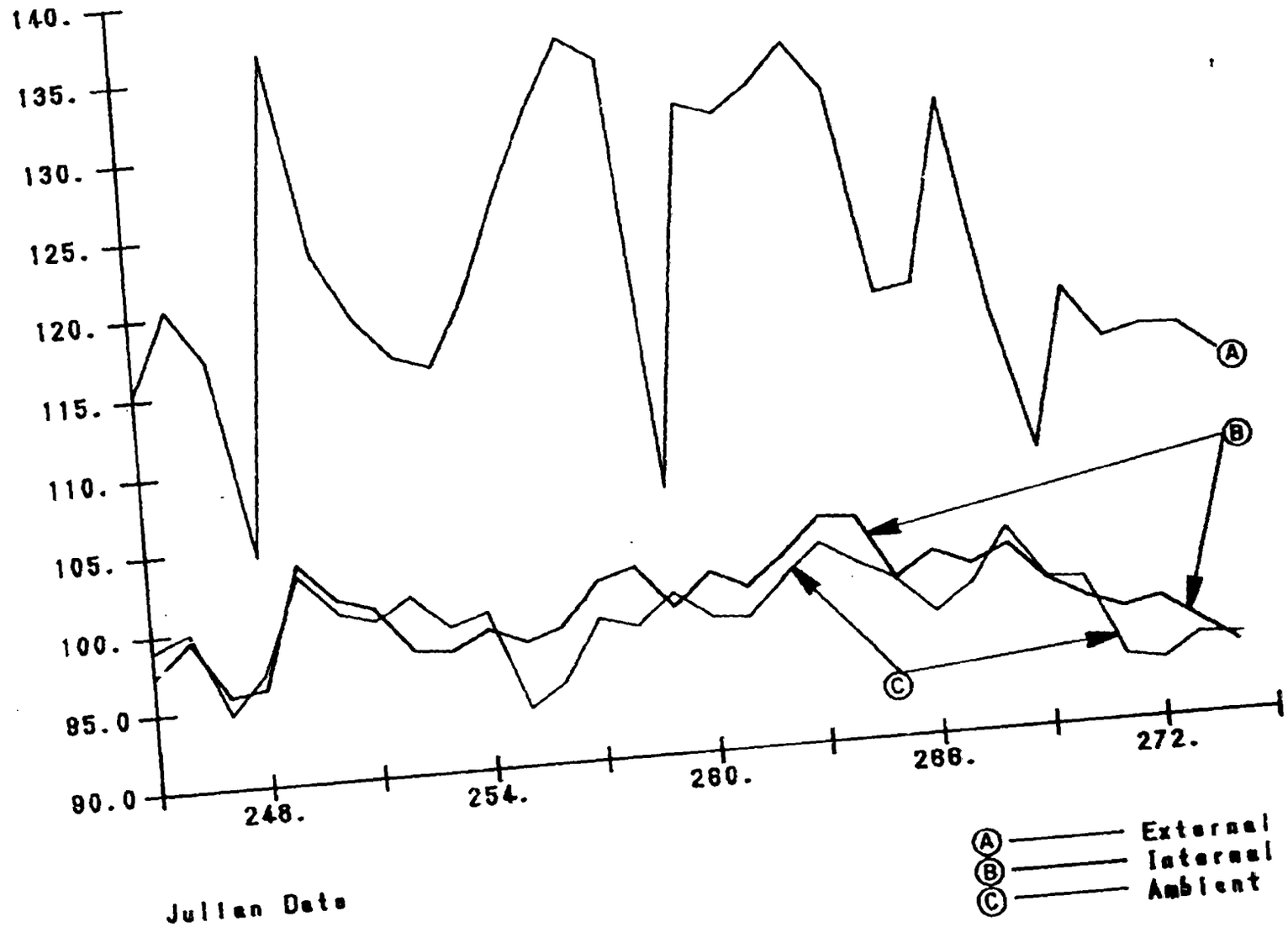

ITEM: CTG. 120MM APFSDS-T M829A1
DODIC: C380. LOT #: MHM90D094-005
Degrees Fahrenheit

Daily Peak Environmental Data From Campbell Logger #1 at TSA 1
Date: June 4 - July 18, 1991

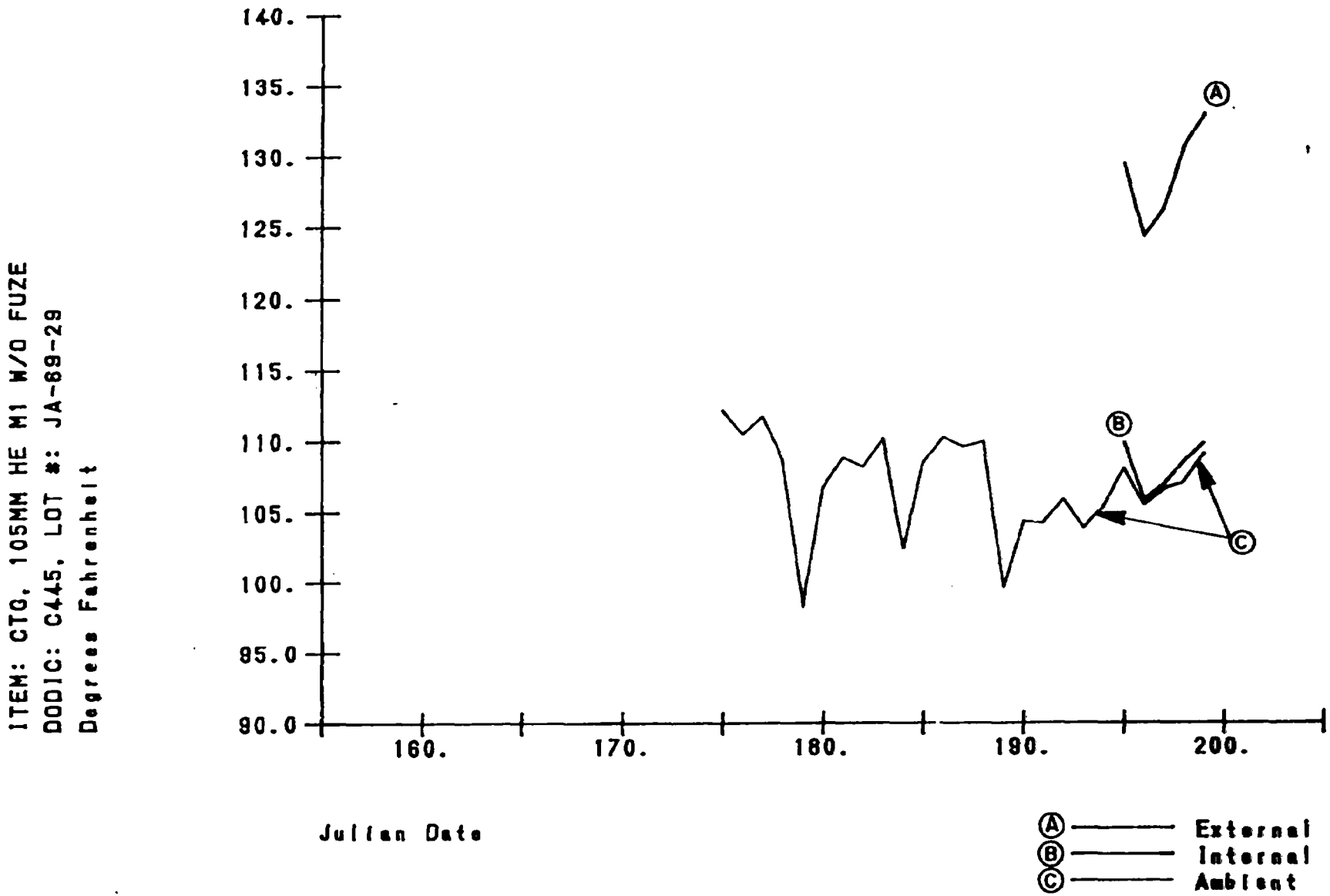

Daily Peak Environmental Data From Campbell Logger #1 at TSA 1
Date: July 19 - September 1, 1991

ITEM: CTG, 105MM HE M1 W/O FUZE
DODIC: C445, LOT #: JA-69-29
Degrees Fahrenheit

Daily Peak Environmental Data From Campbell Logger #1 at TSA 1
Date: September 2 - October 1, 1991

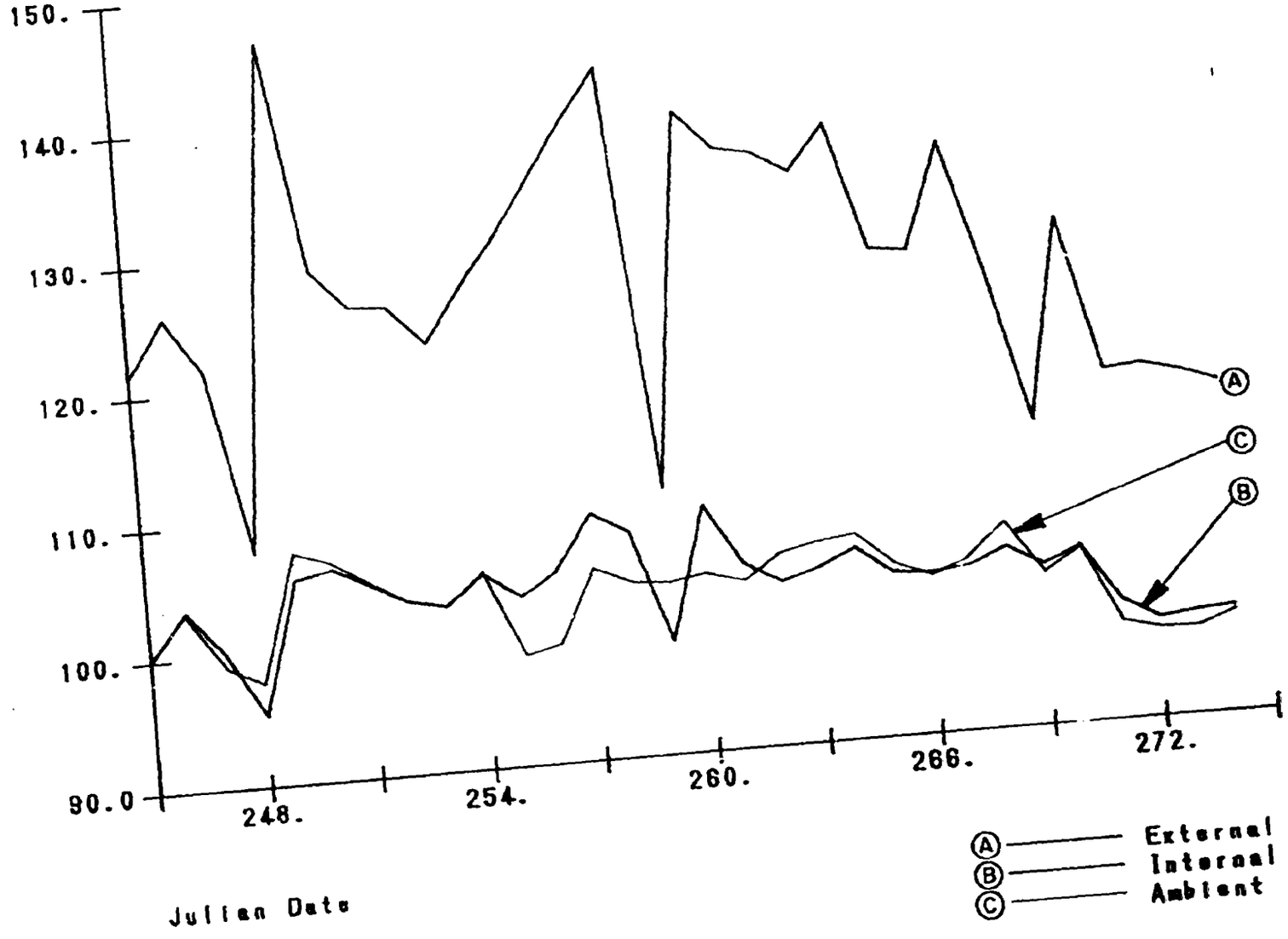

ITEM: CTG, 105MM HE M1 W/O FUZE
DODIC: C445, LOT #: JA-89-29
Degrees Fahrenheit

Daily Peak Environmental Data From Weather Station #2 at TSA 1
Date: June 4 - July 18, 1991

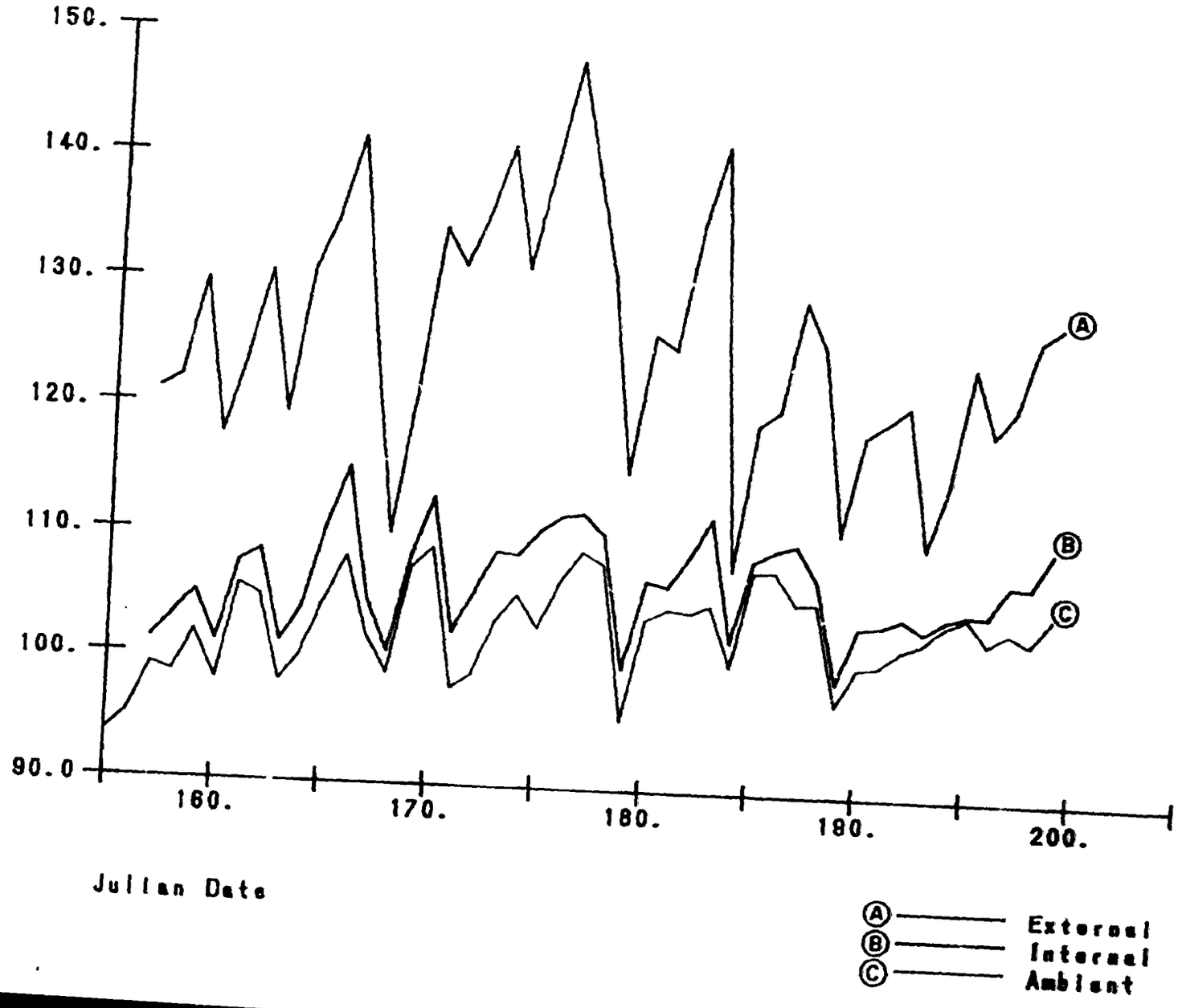

ITEM: CTG. 105MM HEAT-T M456A2
DODIC: C508. LOT #: MA-88B144H001
Degrees Fahrenheit

Daily Peak Environmental Data From Weather Station #2 at TSA 1
Date: July 18 - September 1, 1991

ITEM: CTG, 105MM HEAT-T M456A2
DODIC: C508, LOT #: MA-88B144H001
Degrees Fahrenheit

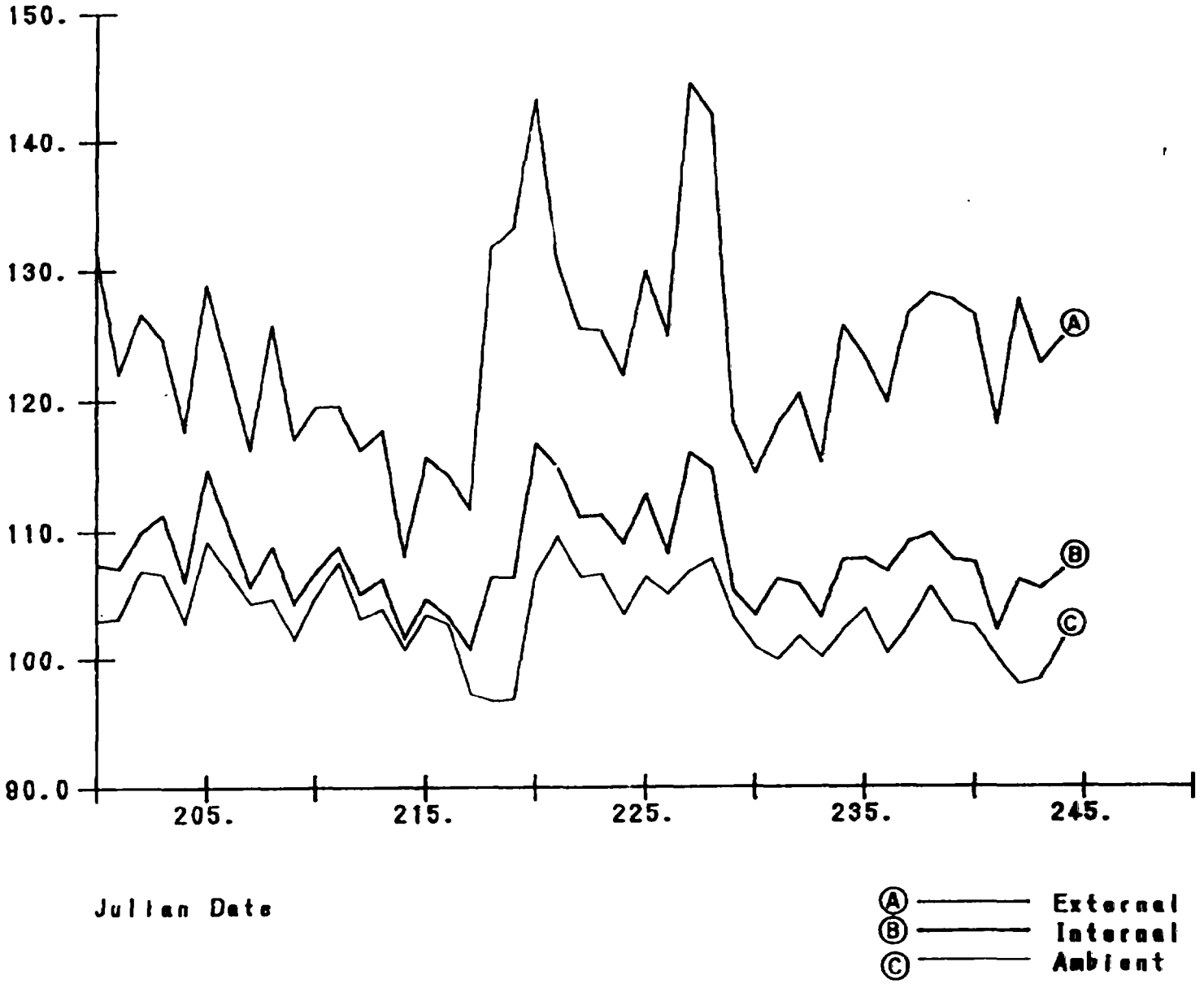

Daily Peak Environmental Data From Weather Station #2 at TSA 1
Date: September 2 - October 1, 1991

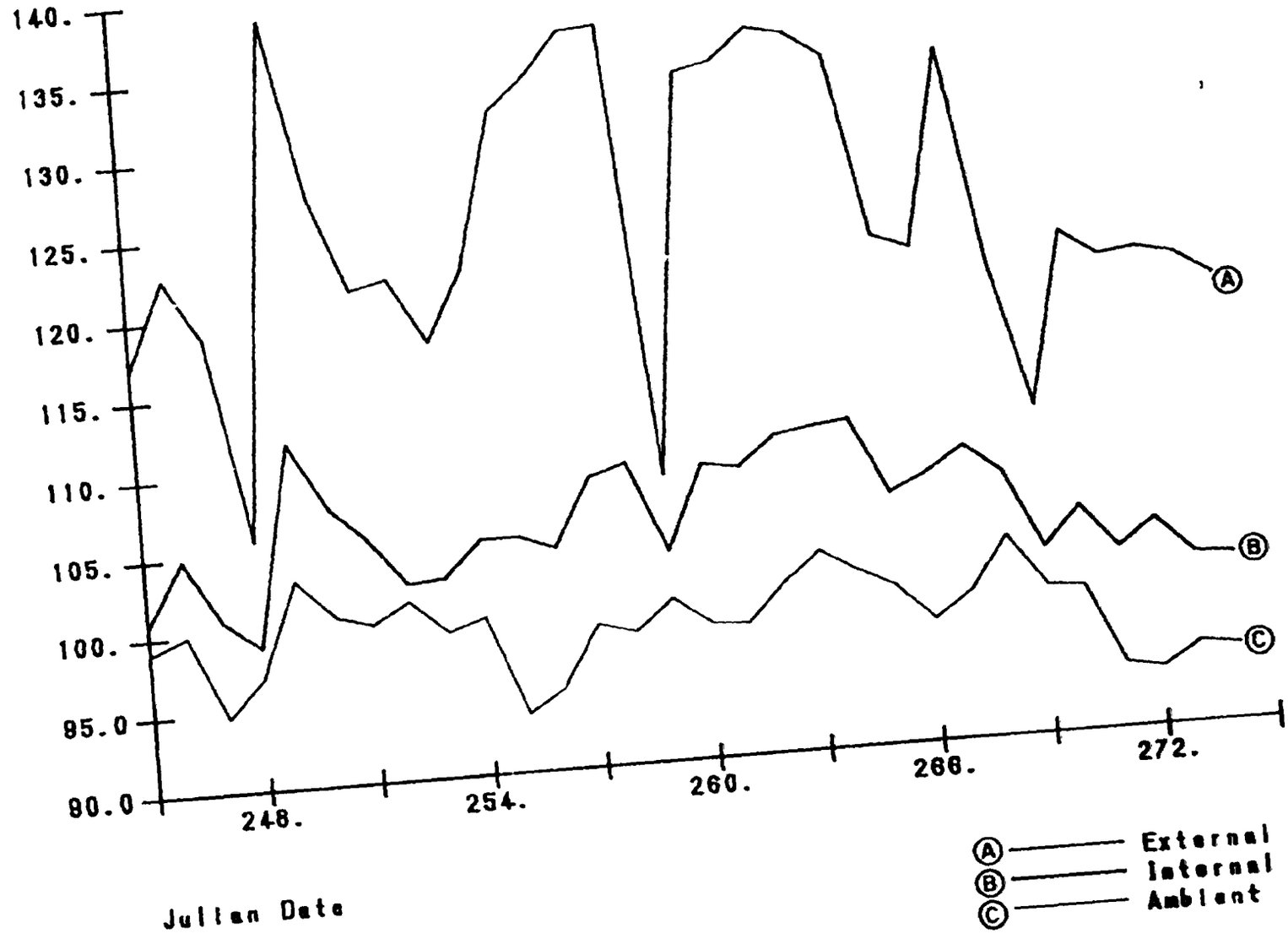

ITEM: CTG, 105MM HEAT-T M456A2
DODIC: C508, LOT #: MA-88B144H001
Degrees Fahrenheit

Daily Peak Environmental Data From Weather Station #2 at TSA 1
Date: June 4 - July 18, 1991

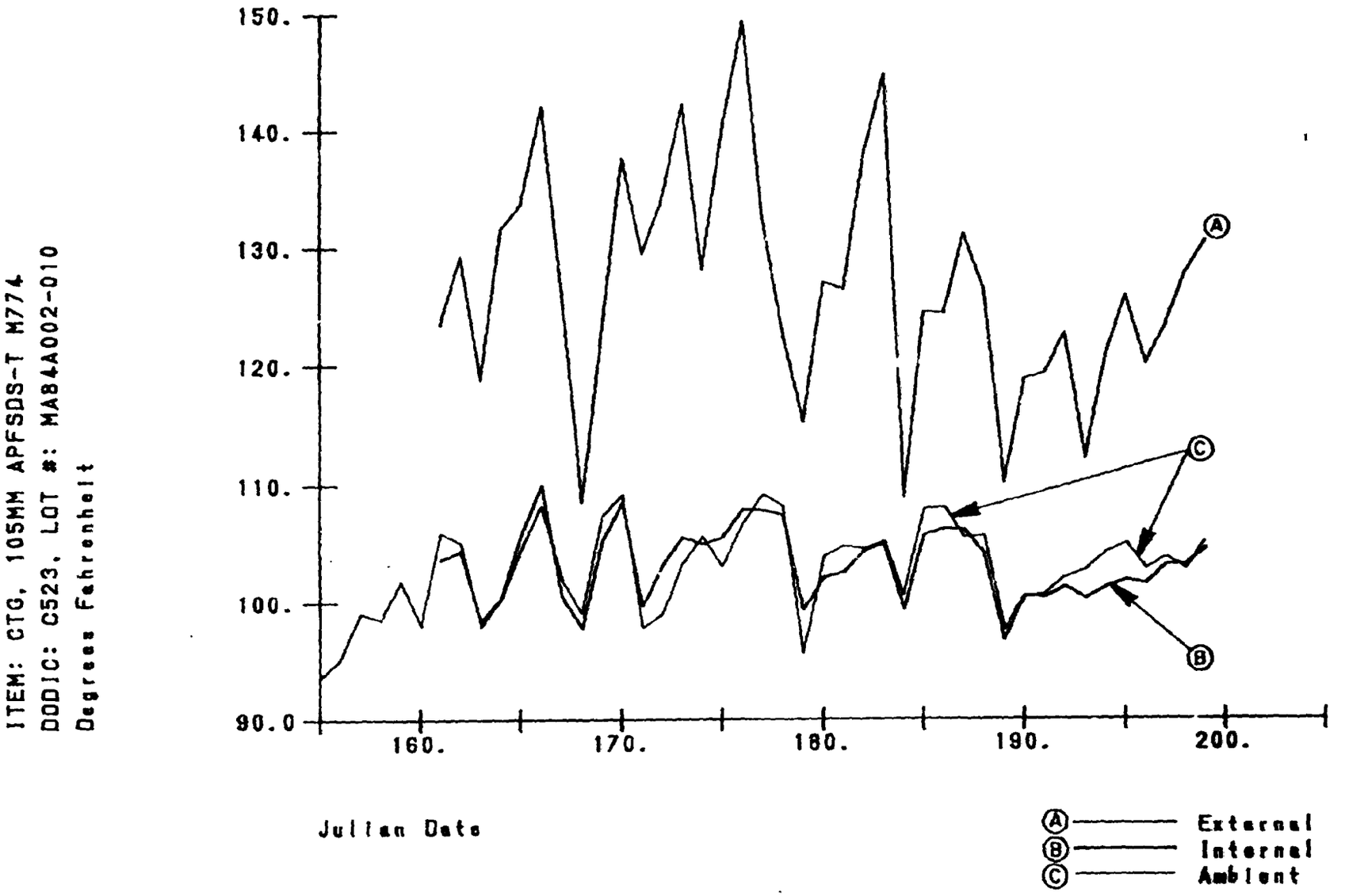

Daily Peak Environmental Data From Weather Station #2 at TSA 1
Date: July 19 - September 1, 1991

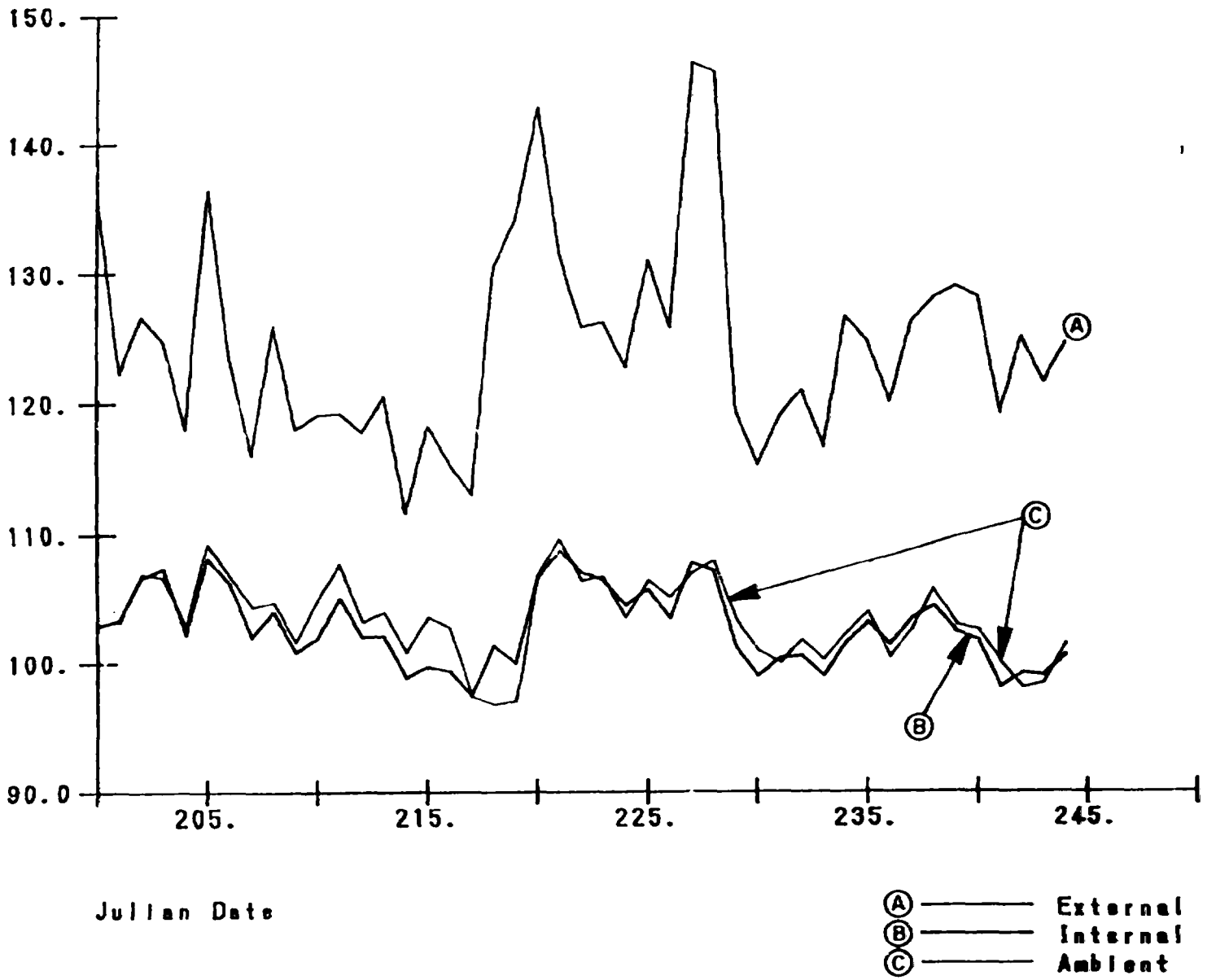

ITEM: CTG, 105MM APFSDS-T M774
DODIC: C523, LOT #: MA84A002-010
Degrees Fahrenheit

Daily Peak Environmental Data From Weather Station #2 at TSA 1
Date: September 2 - October 1, 1981

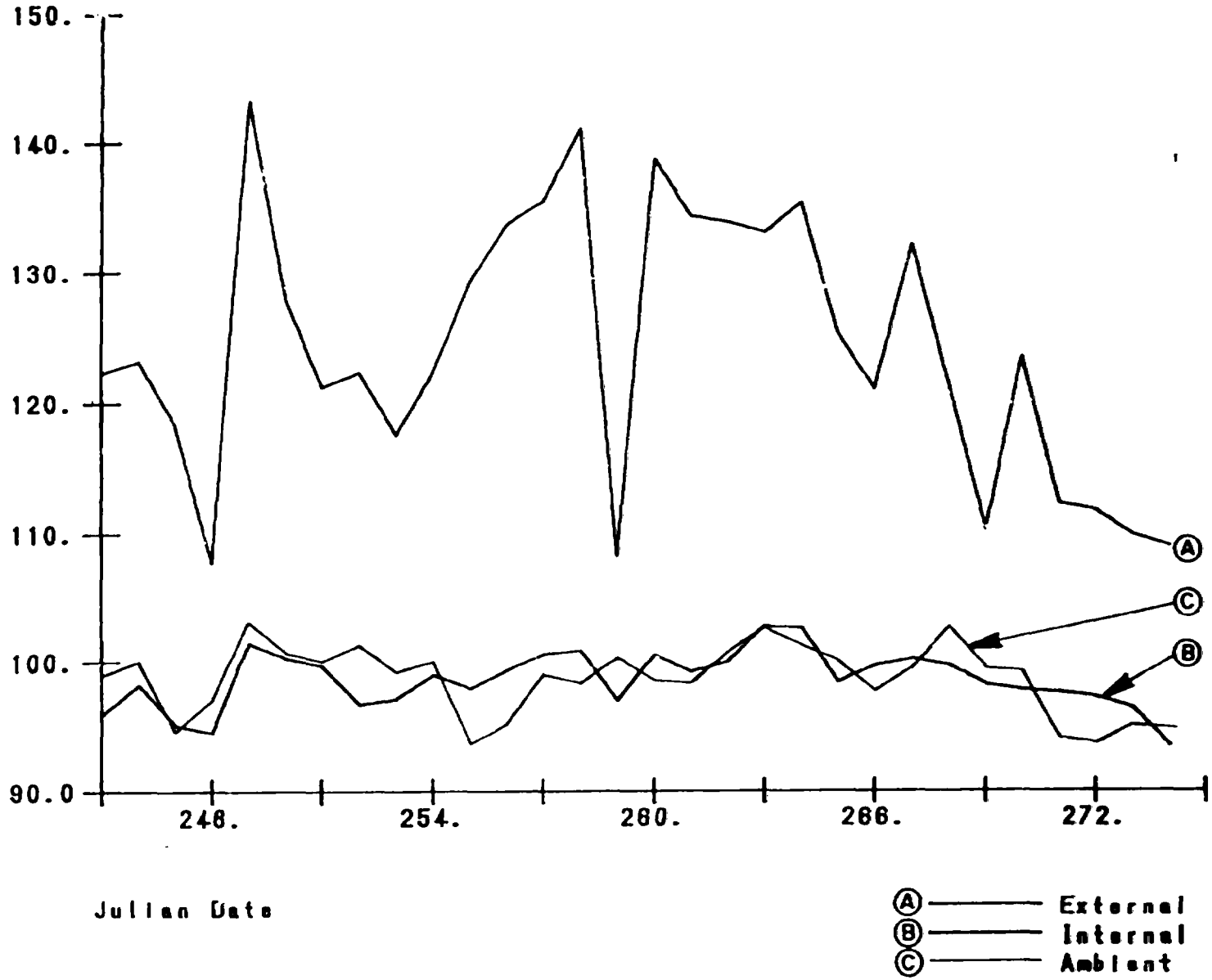

ITEM: CTG, 105MM APFSDS-T M774
DODIC: C523, LOT #: MA84A002-010
Degrees Fahrenheit

Daily Peak Environmental Data From Weather Station #2 at TSA 1
Date: April 20 - June 3, 1991

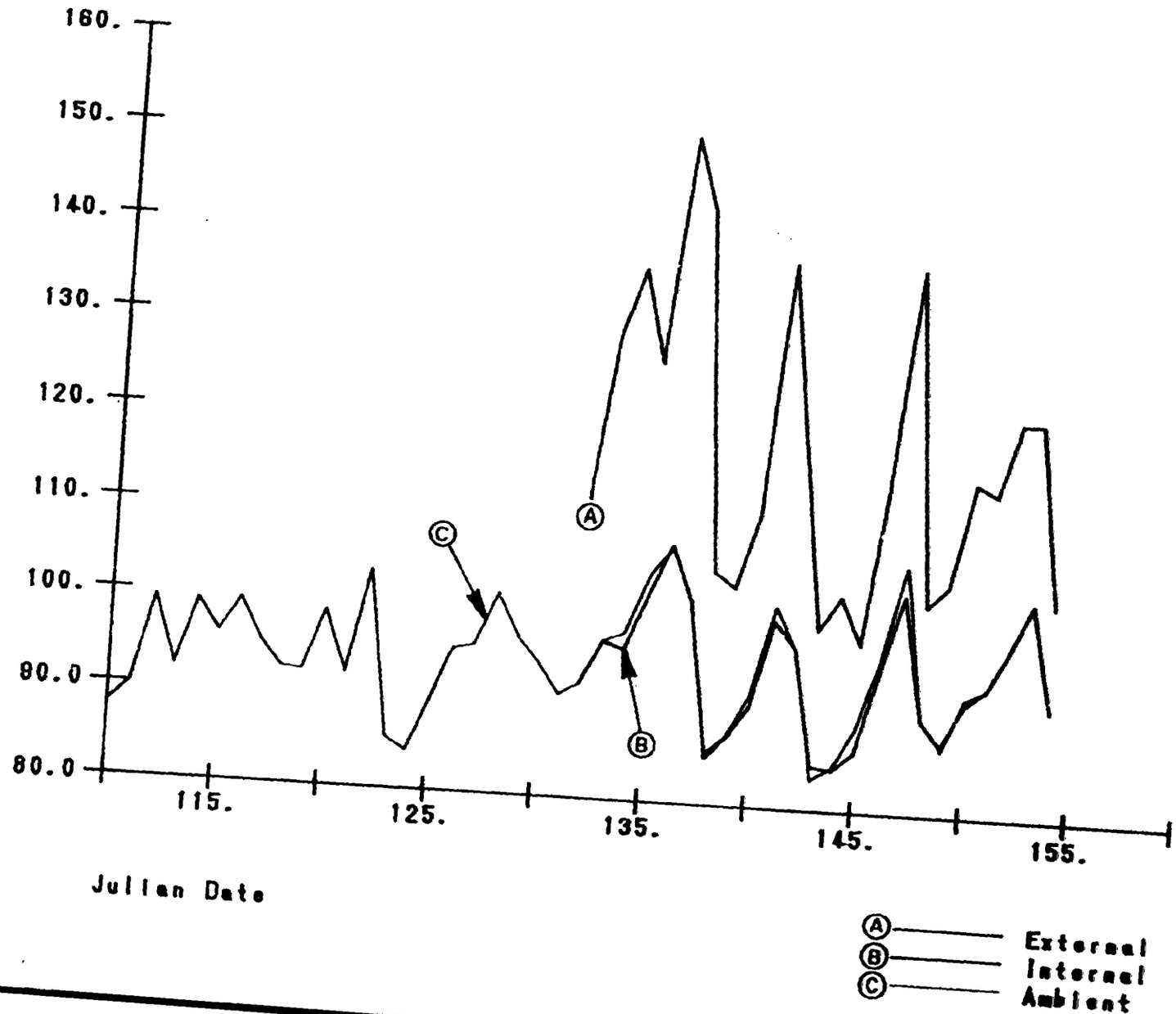

ITEM: CTG, 120MM APFSDS-T M829
DODIC: C786, LOT #: 10P88A073-009
Degrees Fahrenheit

Daily Peak Environmental Data From Weather Station #2 at TSA 1
Date: June 4 - July 16, 1991

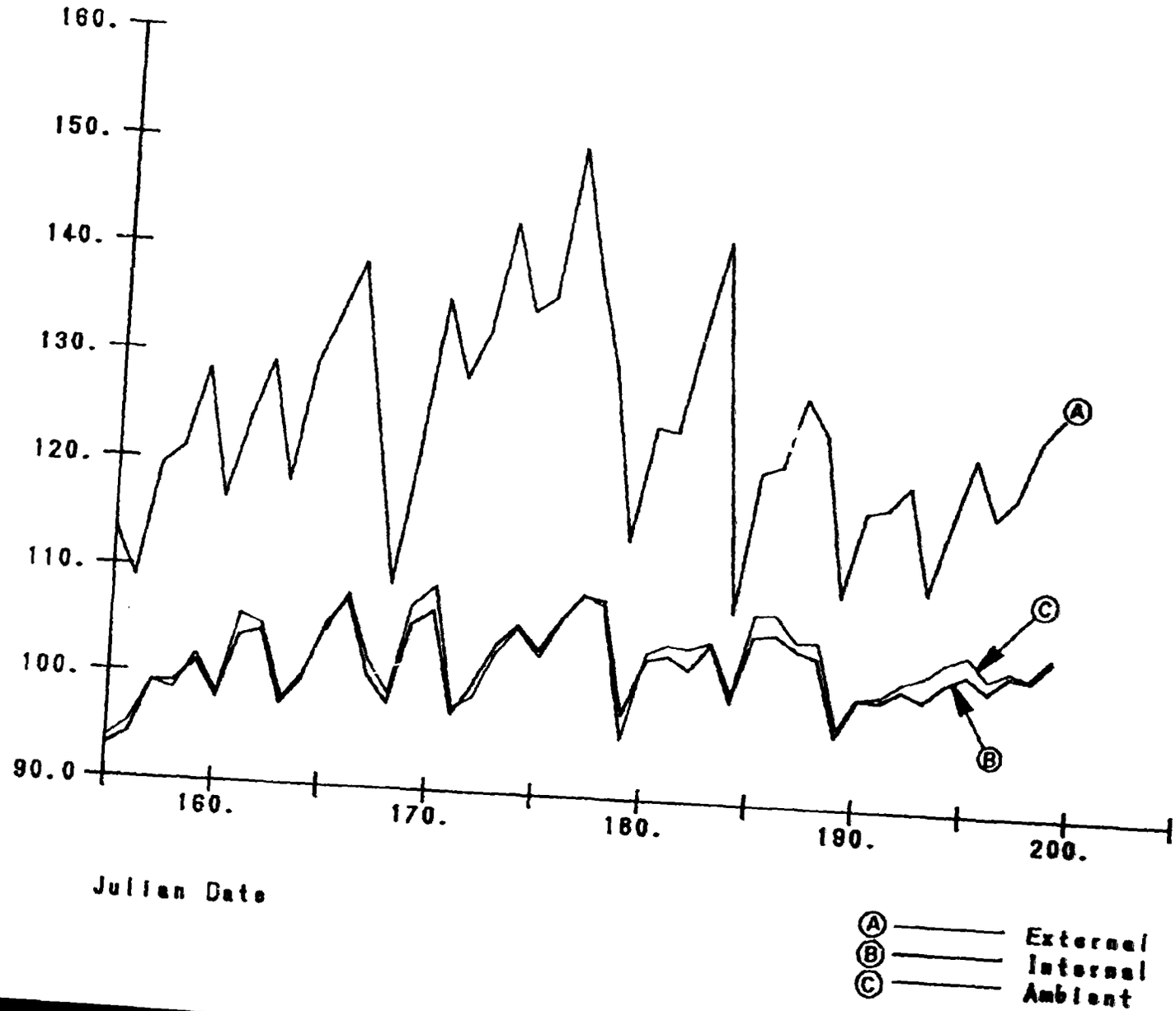

ITEM: CTG, 120MM APFSDS-T M829
DODIC: C786, LOT #: 10P88A073-009
Degrees Fahrenheit

Daily Peak Environmental Data From Weather Station #2 at TSA 1
Date: July 18 - September 1, 1991

Daily Peak Environmental Data From Weather Station #2 at TSA 1
Date: September 2 - October 1, 1991

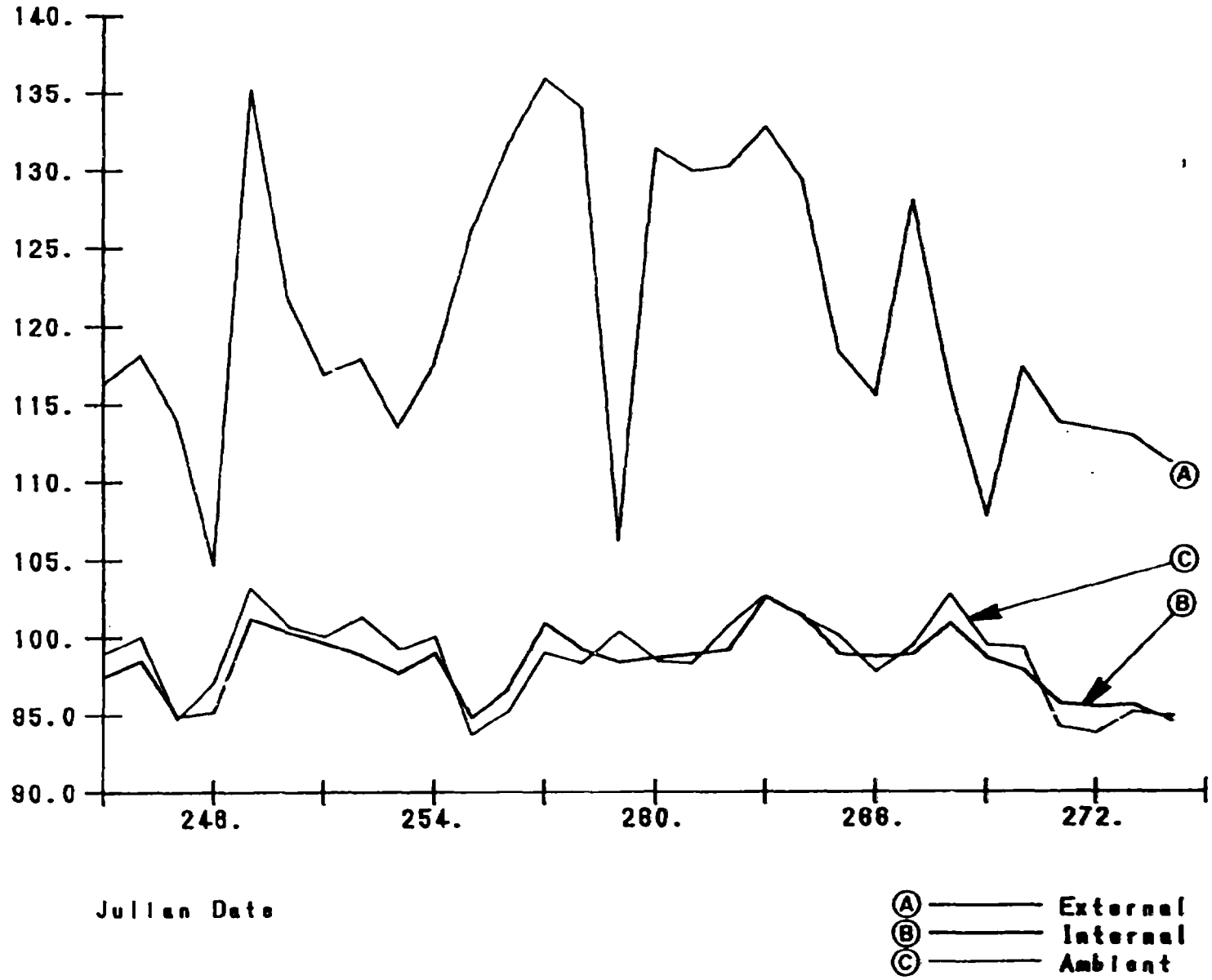

ITEM: CTG, 120MM APFSDS-T M829
DODIC: C786, LOT #: 10P88A073-009
Degrees Fahrenheit

Daily Peak Environmental Data From Weather Station #2 at TSA 1
Date: June 4 - July 18, 1981

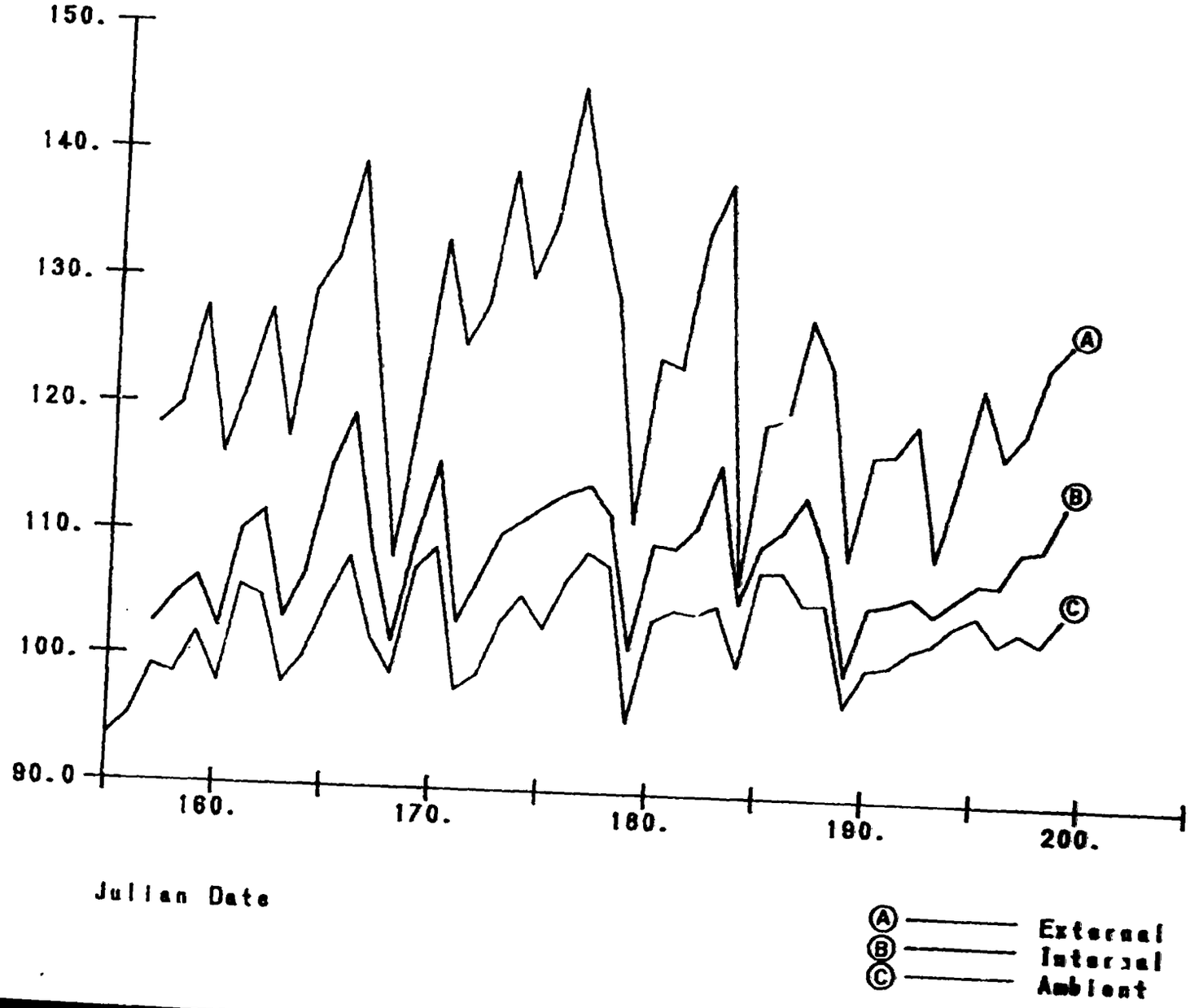

ITEM: CHG. PROP 155MM RB M203
DODIC: D532, LOT #: IND81H-070056
Degrees Fahrenheit

Daily Peak Environmental Data From Weather Station #2 at TSA 1
Date: July 19 - September 1, 1991

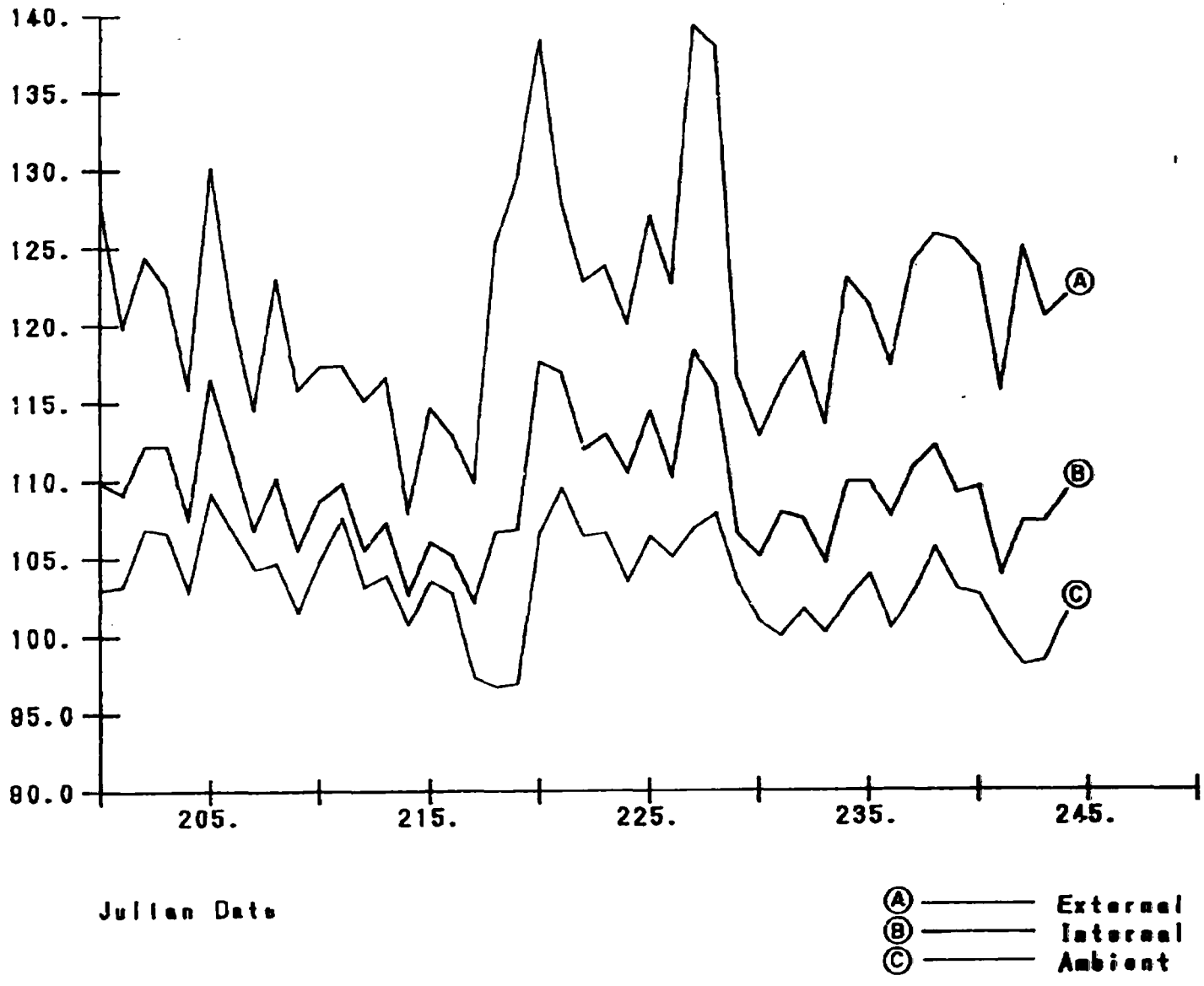

ITEM: CHG, PROP 155MM RB M203
DODIC: D532, LOT #: IND81H-070056
Degrees Fahrenheit

Daily Peak Environmental Data From Weather Station #2 at TSA 1
Date: September 2 - October 1, 1991

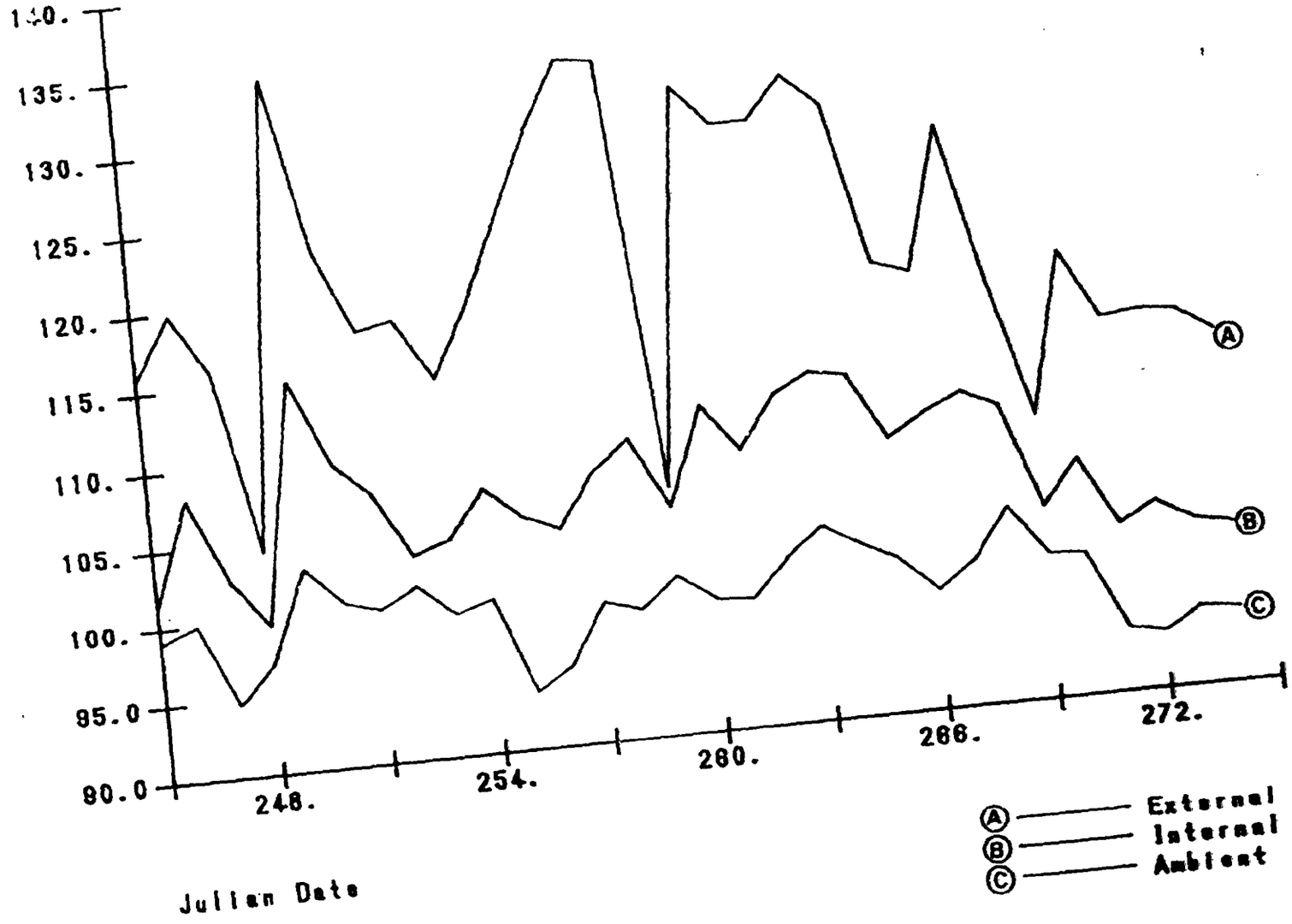

ITEM: CHG. PROP 155MM RB M203
DODIC: D532, LOT #: IND81H-070056
Degrees Fahrenheit

Daily Peak Environmental Data From Weather Station #2 at TSA 1
Date: June 4 - July 16, 1991

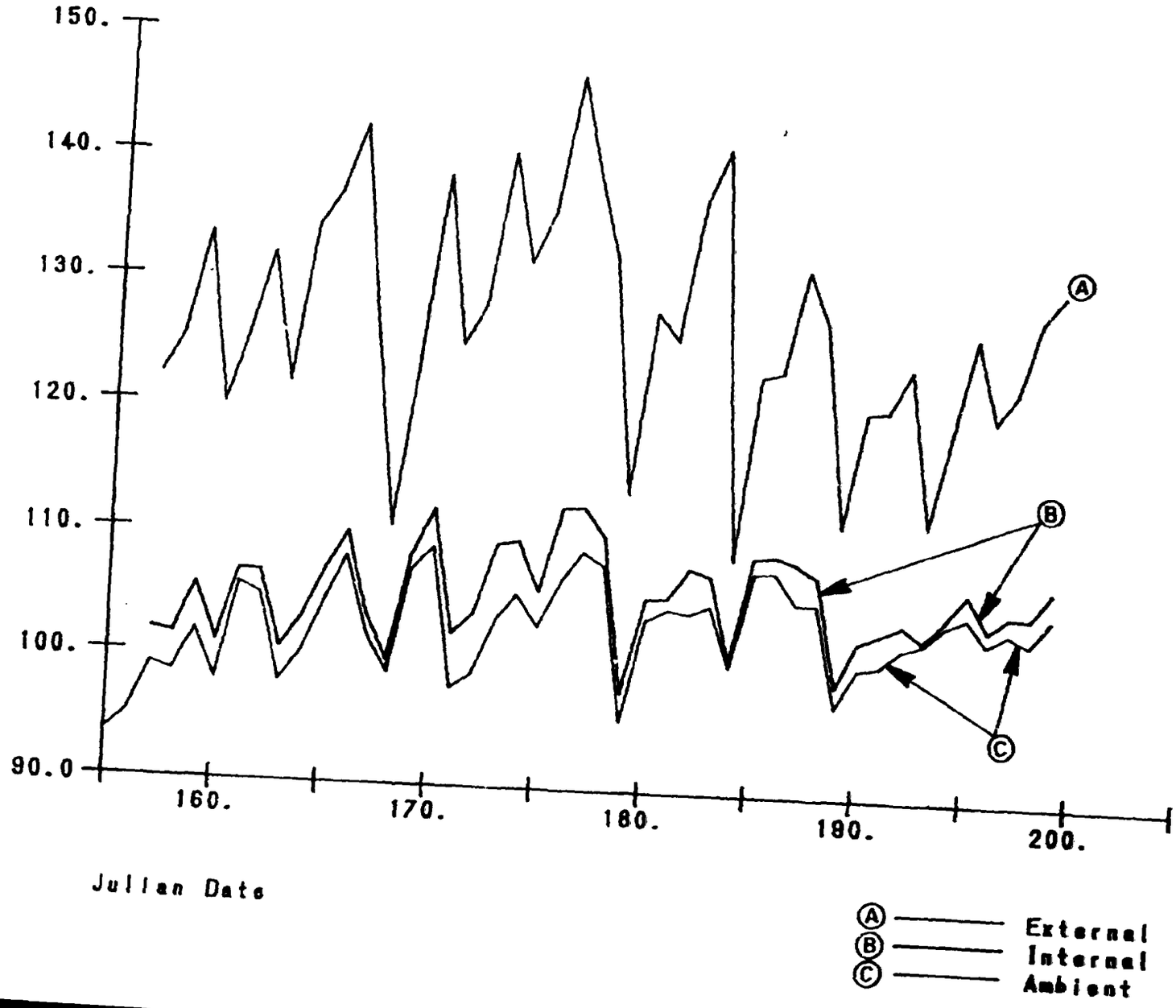

ITEM: CHG. PROP 155MM RB M203
DODIC: D532, LOT #: IND80D-071280
Degrees Fahrenheit

Daily Peak Environmental Data From Weather Station #2 at TSA 1
Date: July 19 - September 1, 1981

ITEM: CHG, PROP 155MM RB M203
DODIC: D532, LOT #: IND90D-071280
Degrees Fahrenheit

Daily Peak Environmental Data From Weather Station #2 at TSA 1
Date: September 2 - October 1, 1991

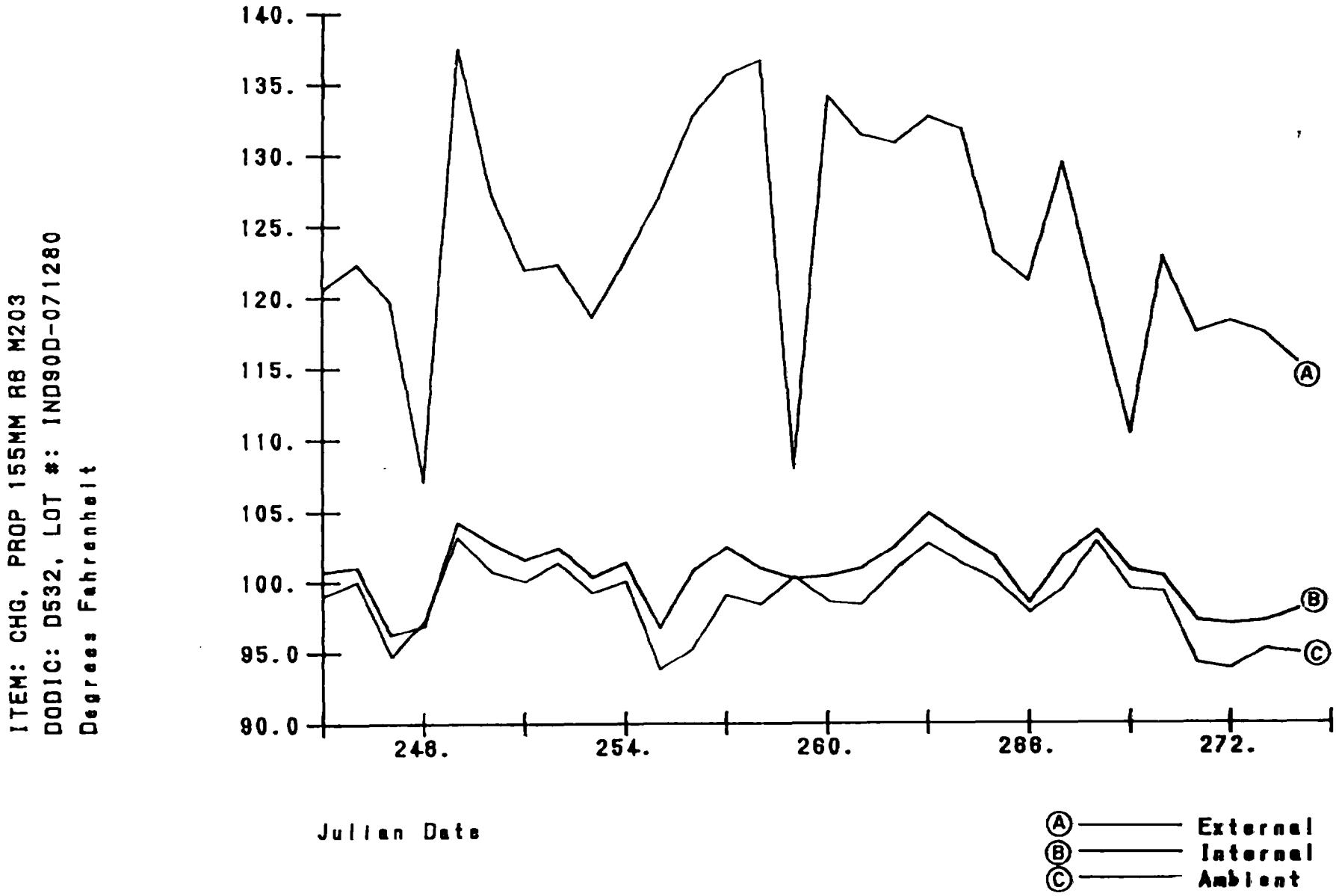

Daily Peak Environmental Data From Weather Station #2 at TSA 1
Date: June 4 - July 16, 1991

ITEM: CHG, PROP 155MM RB M119A2 W/O PRIM
DODIC: D533, LOT #: IND90A-071303
Degrees Fahrenheit

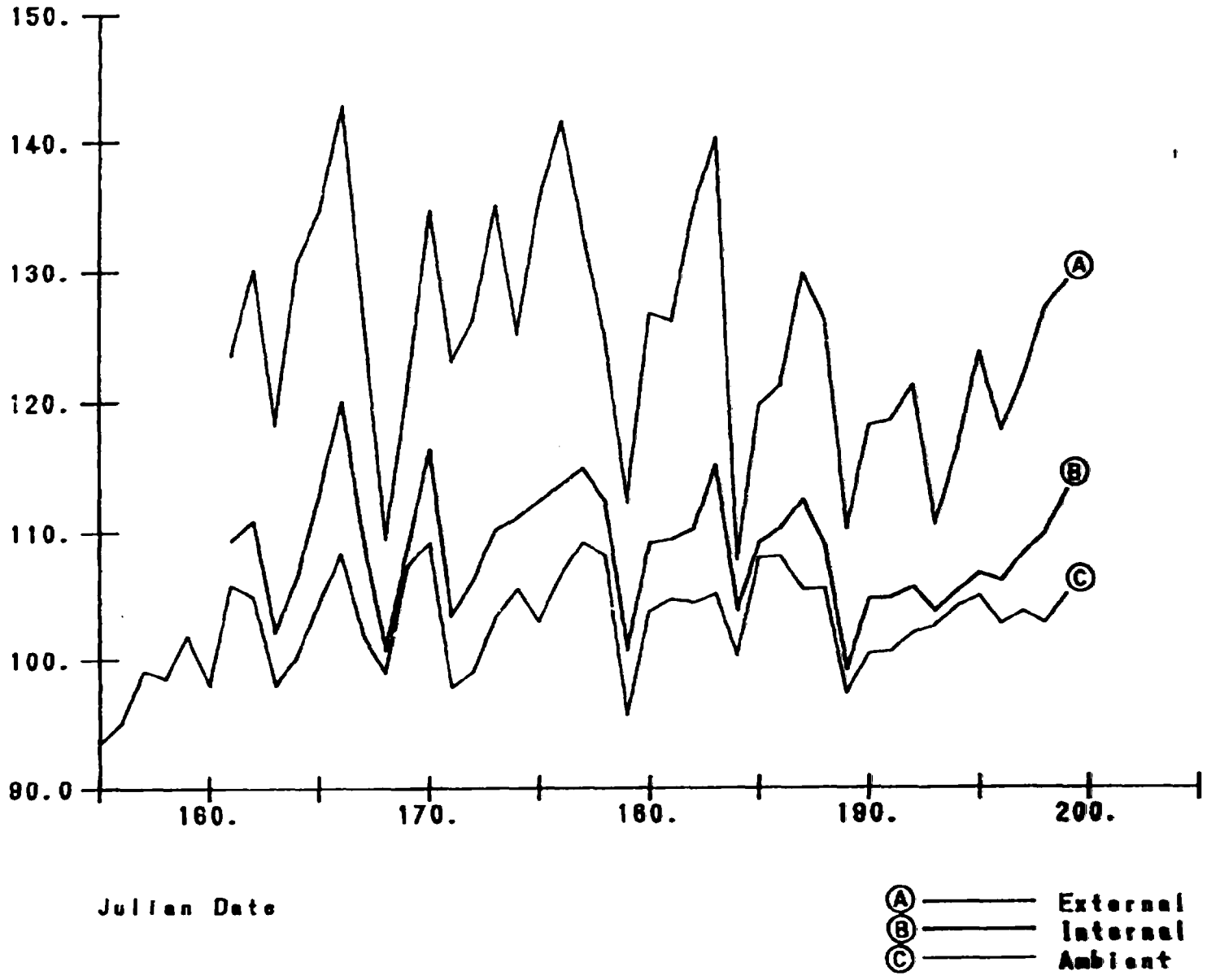

Daily Peak Environmental Data From Weather Station #2 at TSA 1
Date: July 19 - September 1, 1991

ITEM: CHG. PROP 155MM RB M119A2 W/O PRIM
DODIC: D533, LOT #: IND90A-071303
Degrees Fahrenheit

Daily Peak Environmental Data From Weather Station #2 at TSA 1
Date: September 2 - October 1, 1991

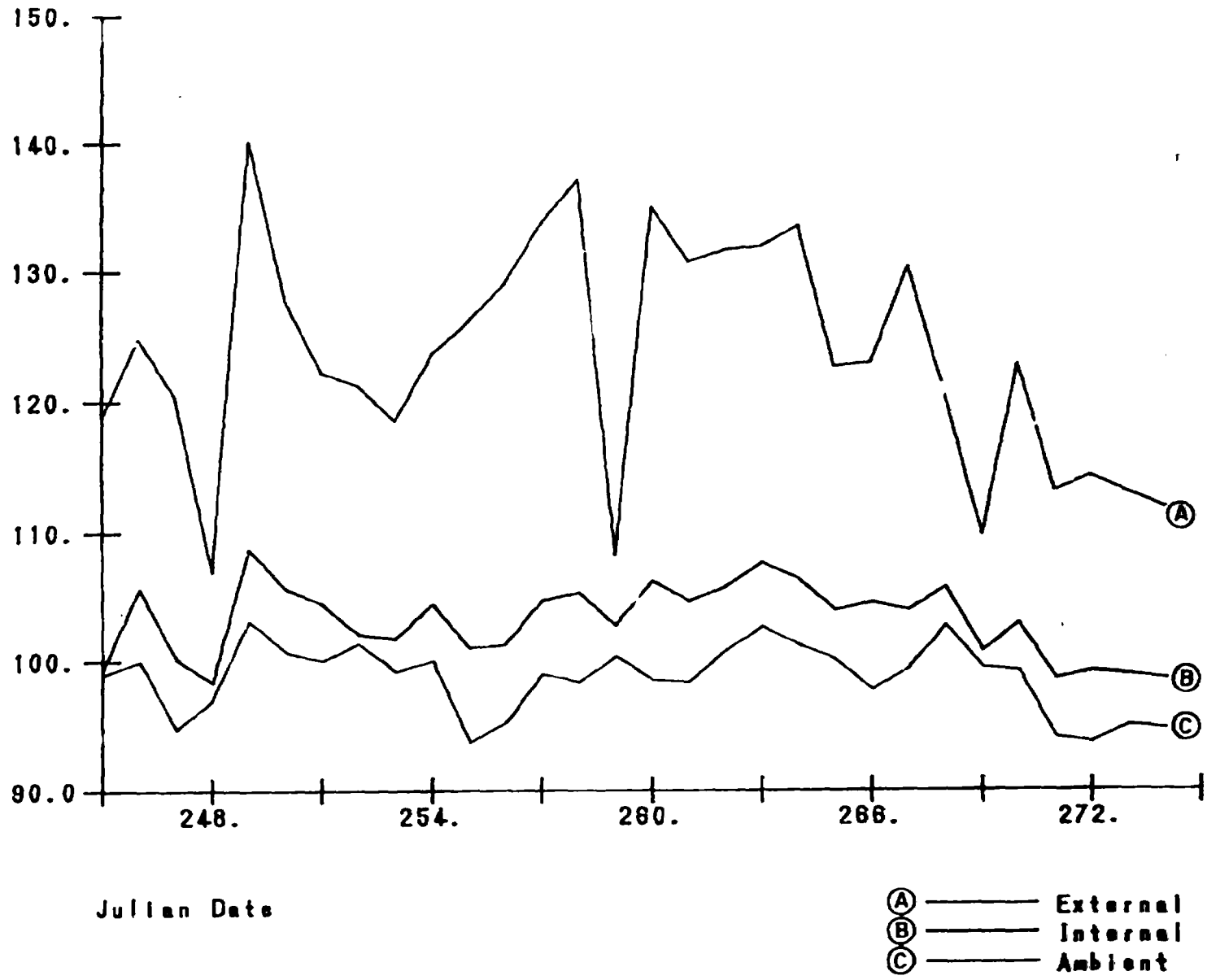

ITEM: CHG, PROP 155MM RB M119A2 W/O PRIM
DODIC: D533, LOT #: IND90A-071303
Degrees Fahrenheit

Daily Peak Environmental Data From Weather Station #2 at TSA 1
Date: June 4 - July 18, 1991

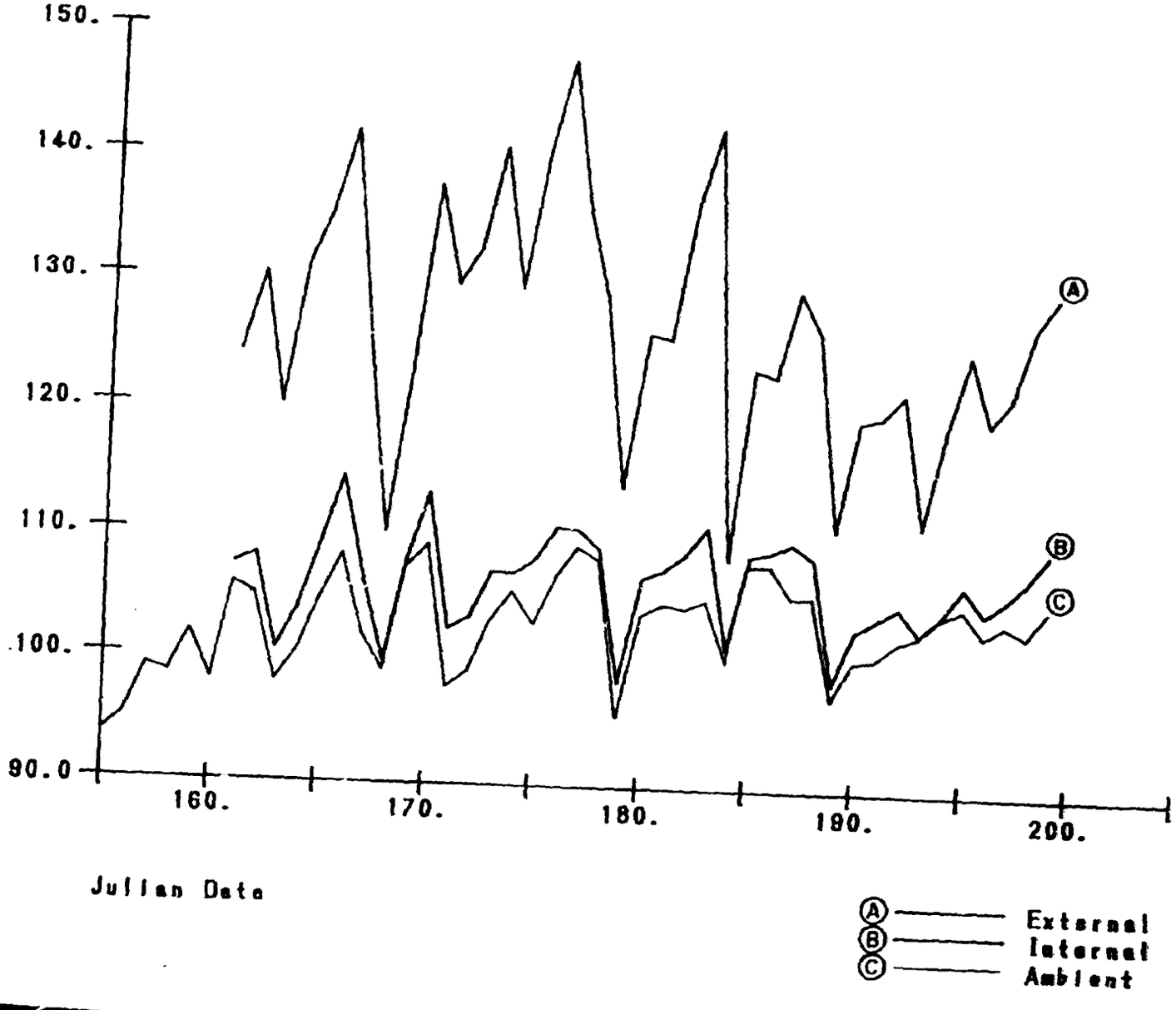

ITEM: CHG. PROP 155MM GB M3A1
DODIC: D540, LOT #: IND87G-070748
Degrees Fahrenheit

Daily Peak Environmental Data From Weather Station #2 at TSA 1
Date: July 19 - September 1, 1991

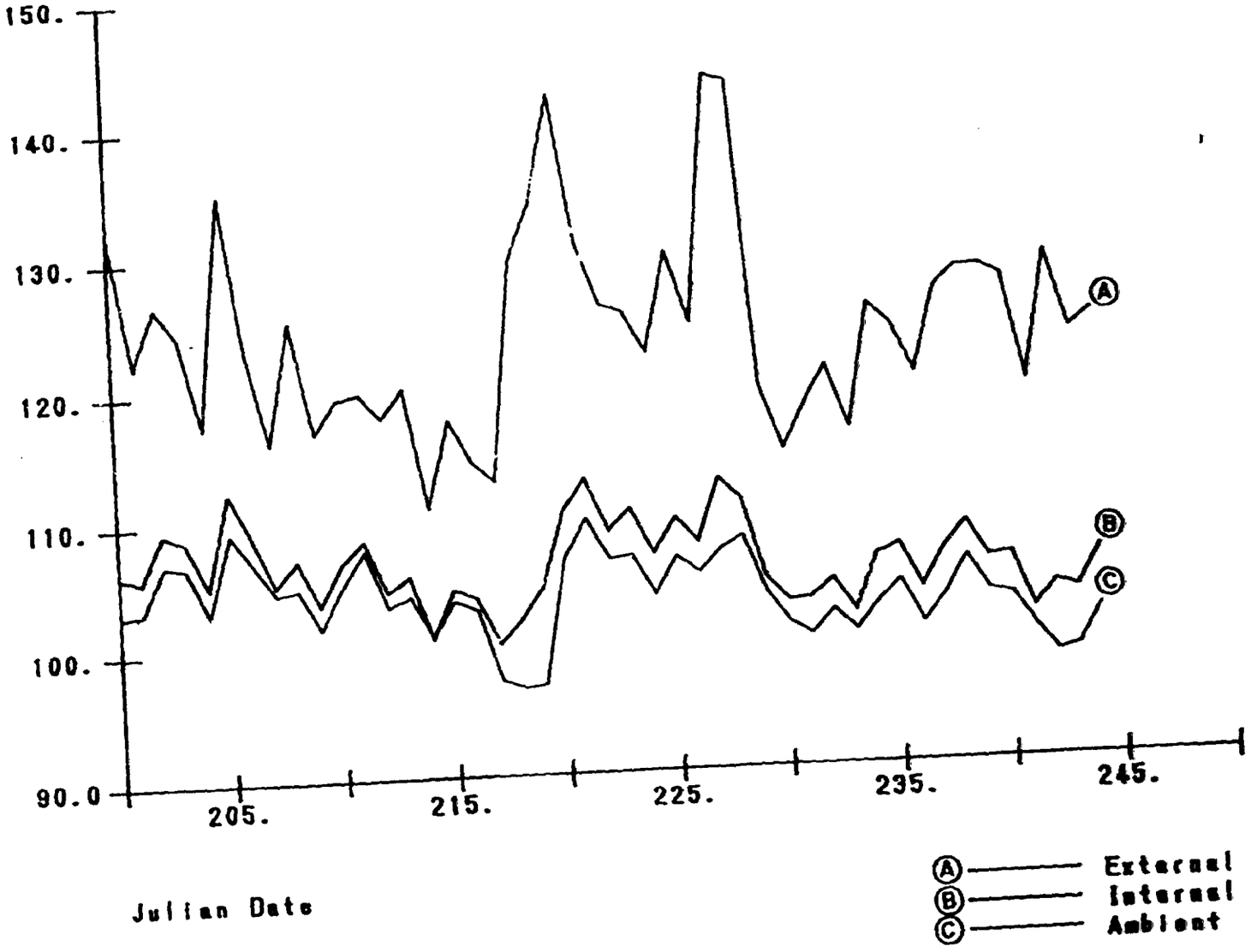

ITEM: CHG, PROP 155MM GB M3A1
DODIC: D540, LOT #: IND87G-070748
Degrees Fahrenheit

Daily Peak Environmental Data From Weather Station #2 at TSA 1
Date: September 2 - October 1, 1991

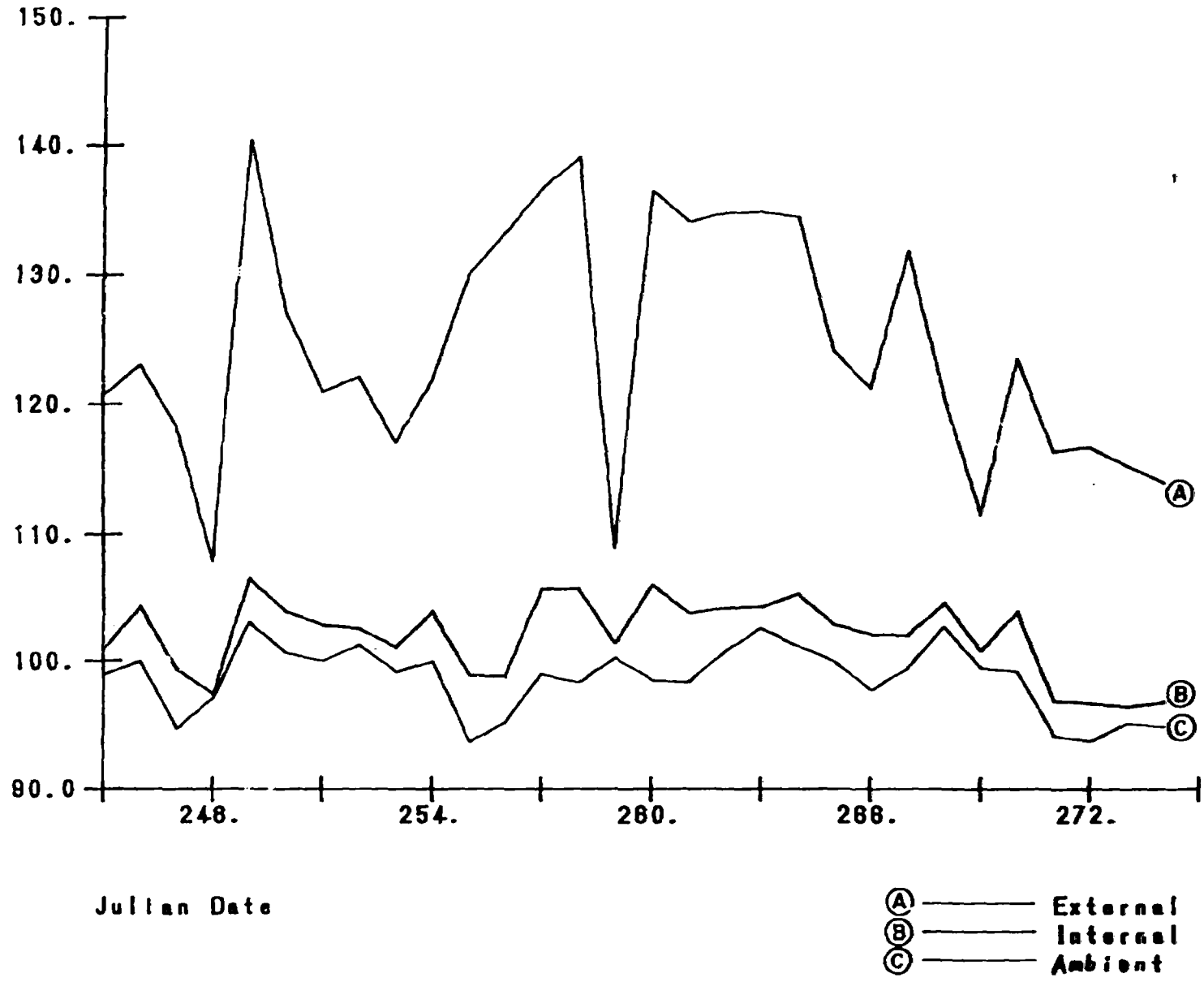

ITEM: CHG, PROP 155MM GB M3A1
DODIC: D540, LOT #: IND87G-070748
Degrees Fahrenheit

Daily Peak Environmental Data From Weather Station #2 at TSA 1
Date: June 4 - July 18, 1991

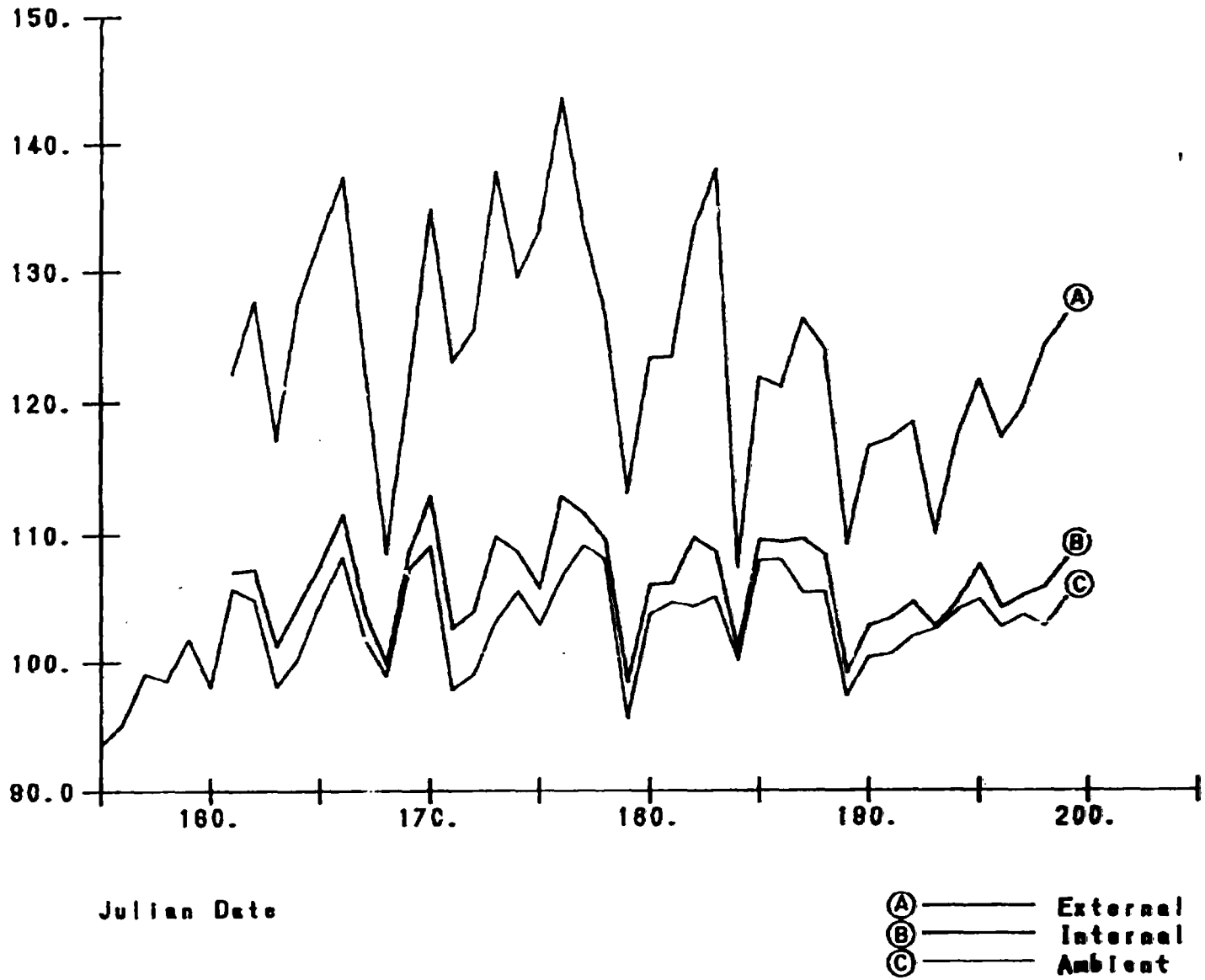

ITEM: CHG, PROP 155MM WB M4A2
DODIC: D541, LOT #: BAJ-83448
Degrees Fahrenheit

Daily Peak Environmental Data From Weather Station #2 at TSA 1
Date: July 19 - September 1, 1991

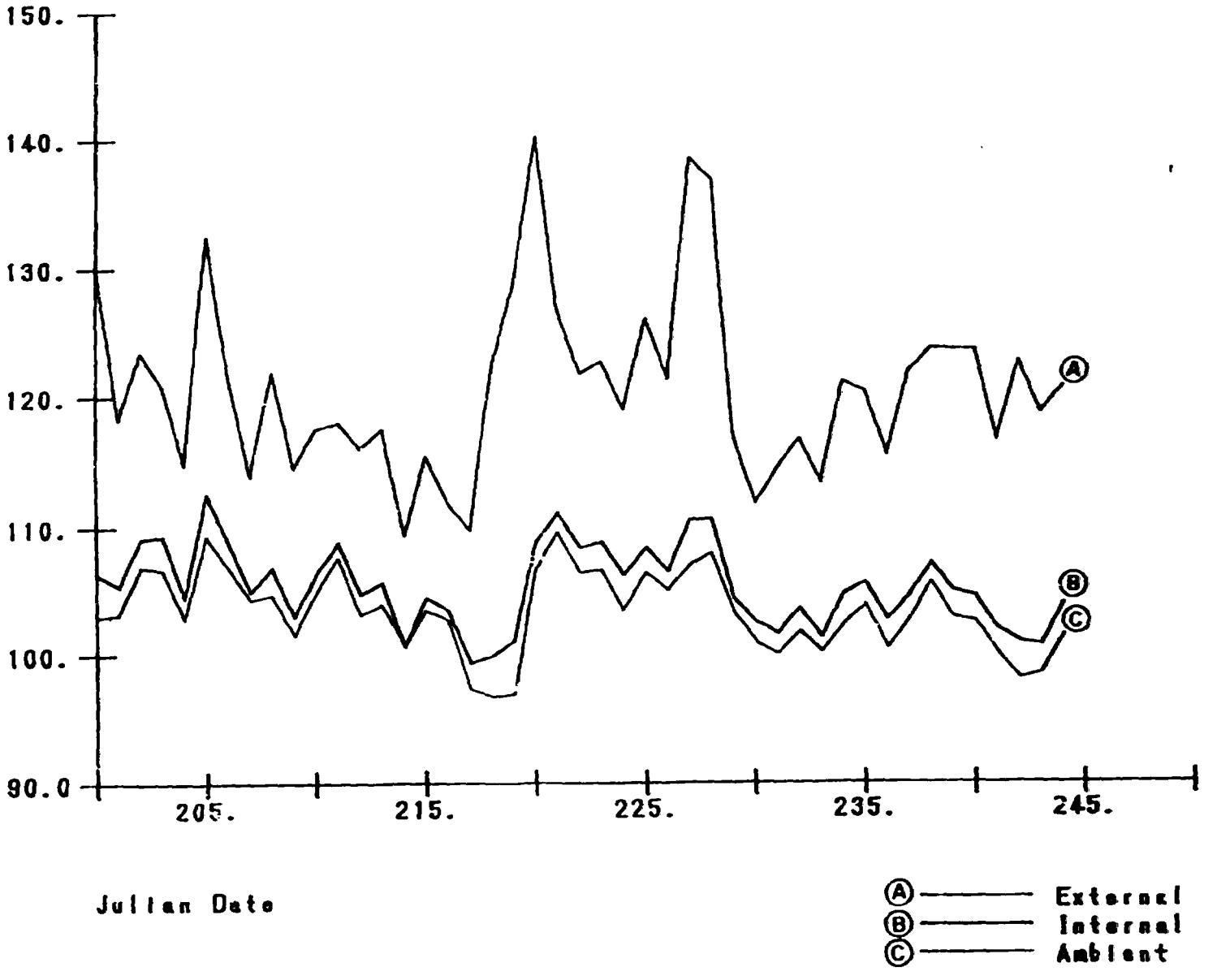

ITEM: CHG, PROP 155MM WB M4A2
DODIC: D541, LOT #: BAJ-83448
Degrees Fahrenheit

Daily Peak Environmental Data From Weather Station #2 at TSA 1
Date: September 2 - October 1, 1991

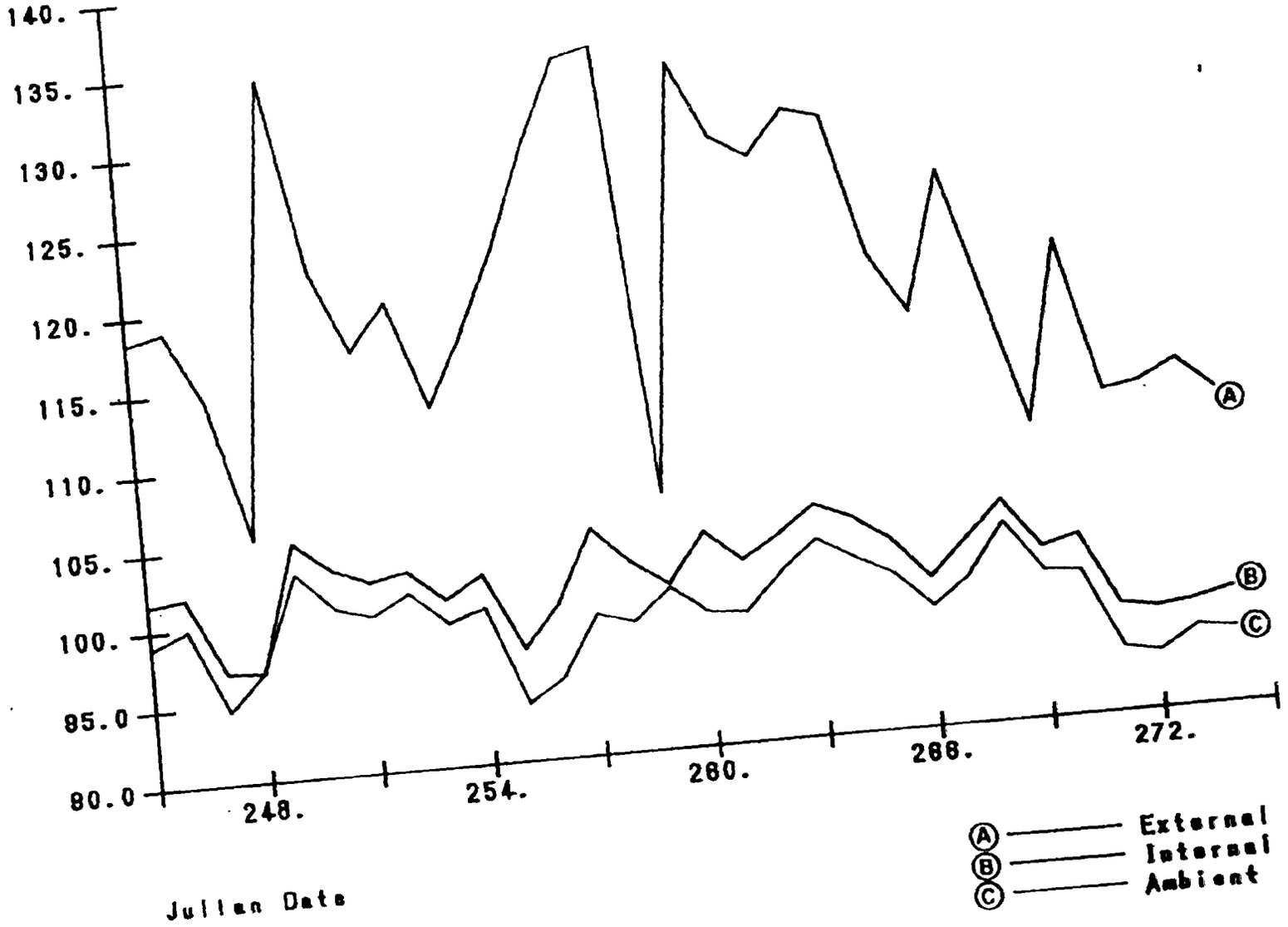

ITEM: CHG, PROP 155MM WB M4A2
DODIC: D541, LOT #: BAJ-63448
Degrees Fahrenheit

Daily Peak Environmental Data From Weather Station #2 at TSA 1
Date: June 4 - July 18, 1991

ITEM: PROJ. 155MM HE RAP M549A1 (COMP B)
DODIC: D579, LOT #: 10P81U03L-019A
Degrees Fahrenheit

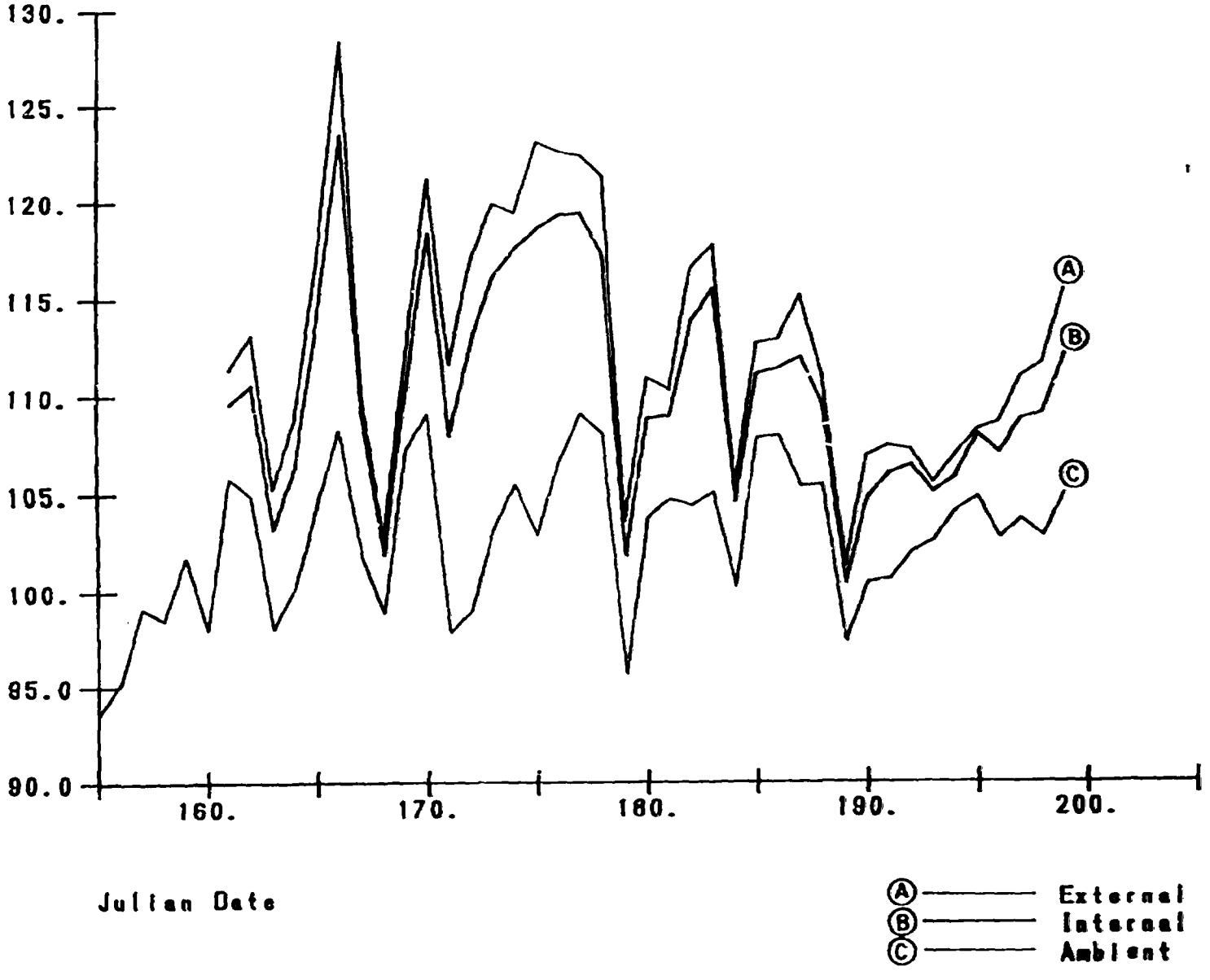

Daily Peak Environmental Data From Weather Station #2 at TSA 1
Date: July 19 - September 1, 1991

ITEM: PROJ. 155MM HE RAP M549A1 (COMP B)
DODIC: D579, LOT #: 10P81U03L-019A
Degrees Fahrenheit

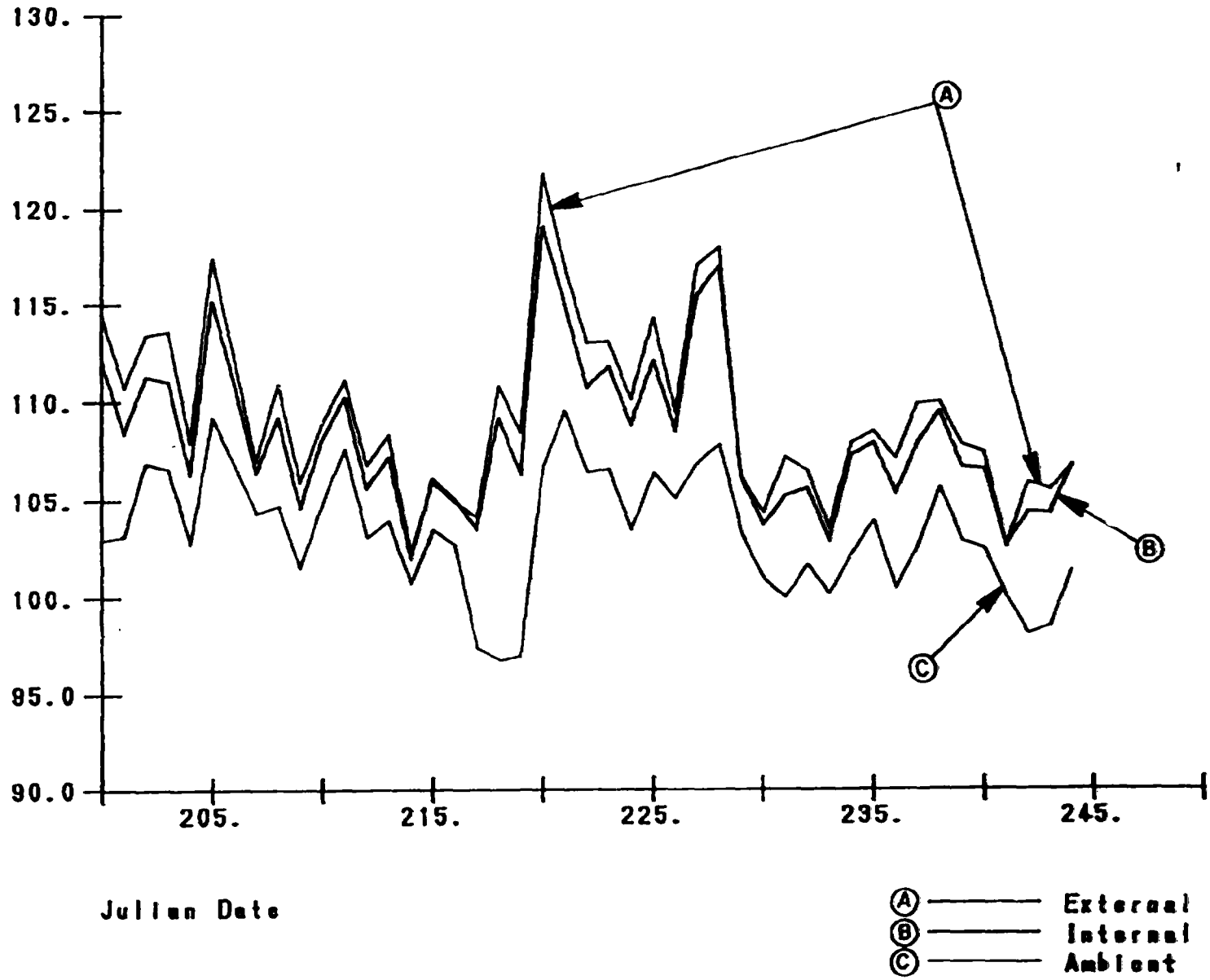

Daily Peak Environmental Data From Weather Station #2 at TSA 1
Date: September 2 - October 1, 1991

ITEM: PROJ. 155MM HE RAP M549A1 (COMP B)
DODIC: D579, LOT #: 10P81U03L-019A
Degrees Fahrenheit

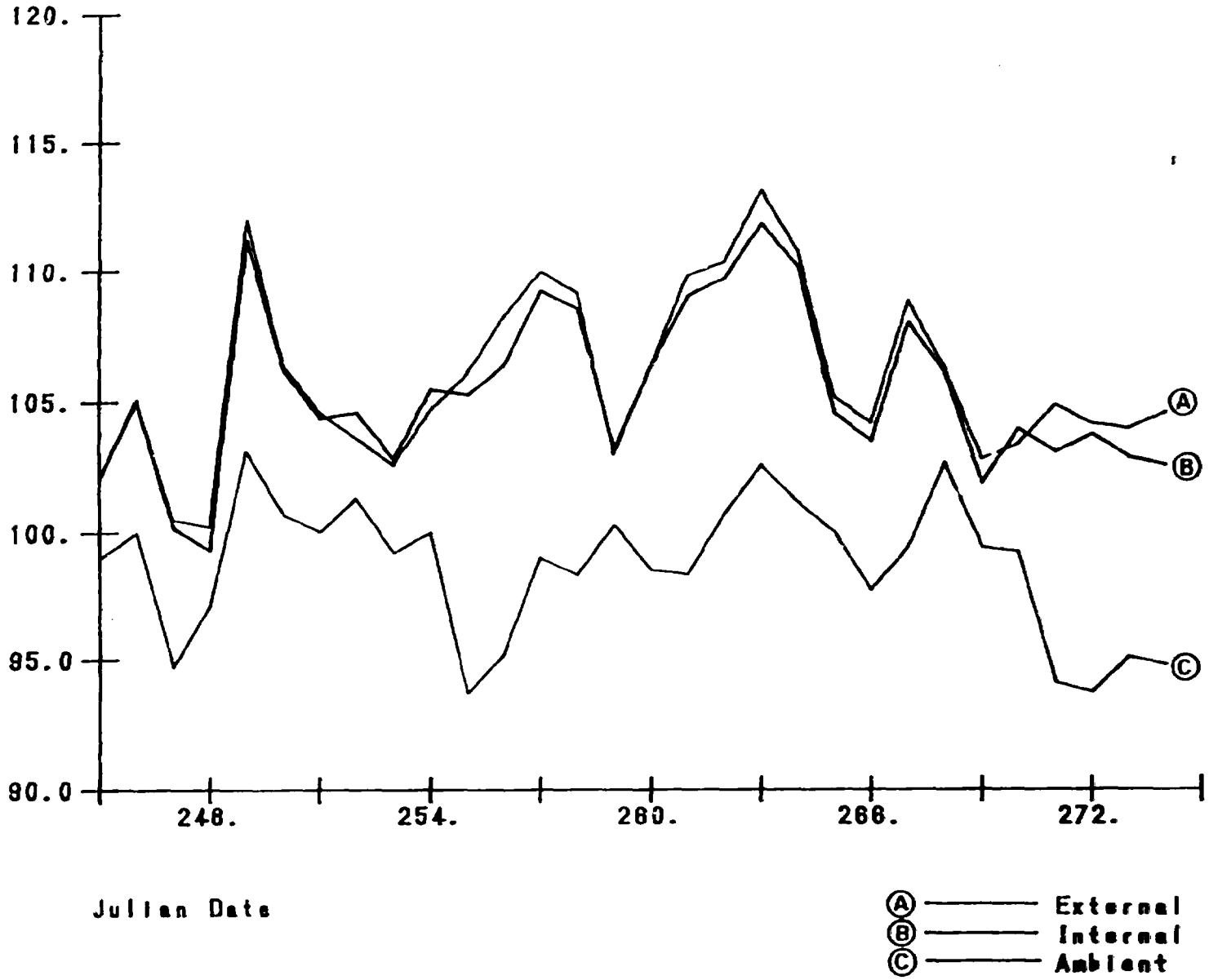

Daily Peak Environmental Data From Weather Station #2 at TSA 1
Date: June 4 - July 18, 1991

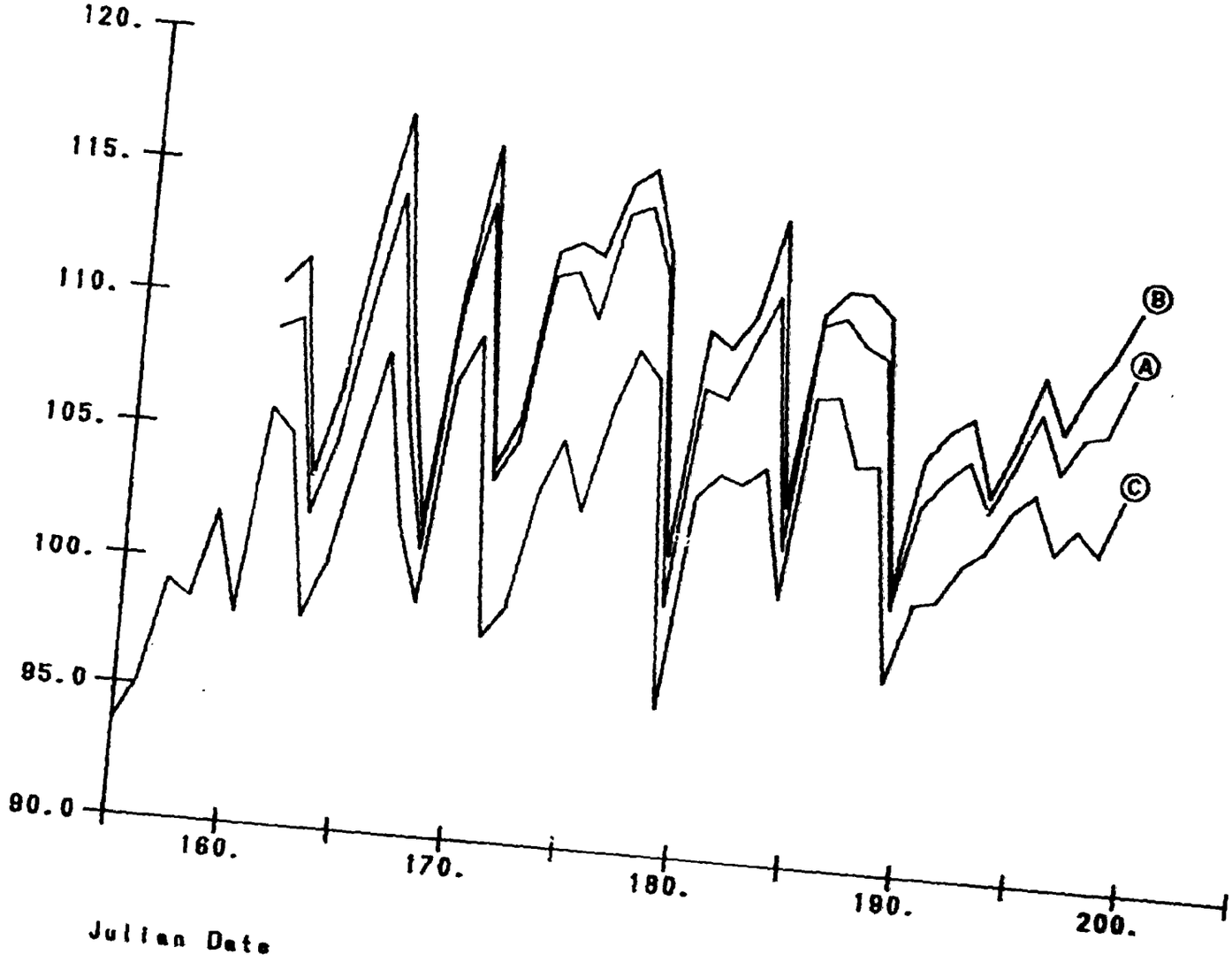

A — External
B — Internal
C — Ambient

ITEM: PROJ. 8IN HE RAP M650
DODIC: D624, LOT #: 10P88U050-001
Degrees Fahrenheit

Daily Peak Environmental Data From Weather Station #2 at TSA 1
Date: July 19 - September 1, 1991

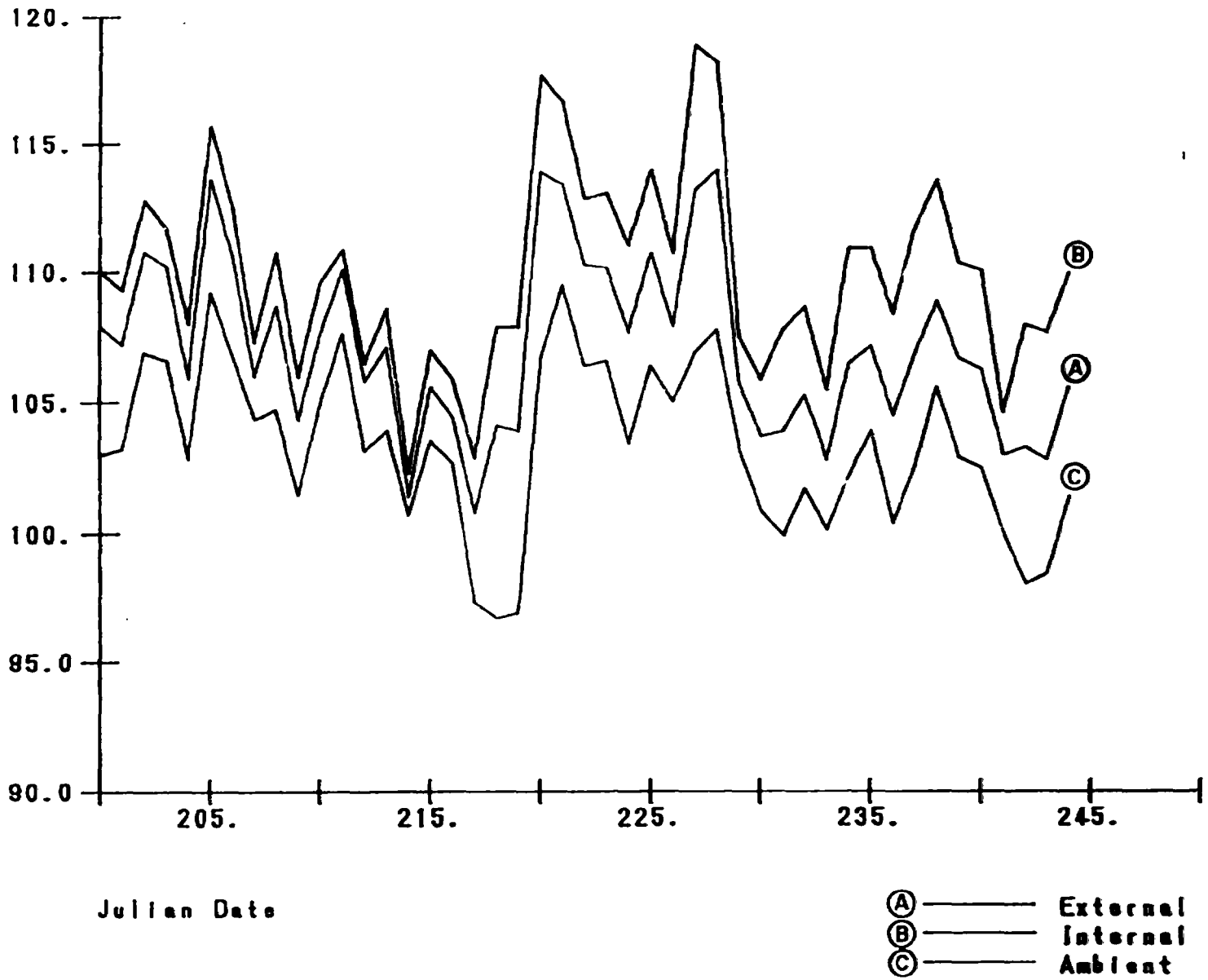

ITEM: PROJ. 8IN HE RAP M650
DODIC: D624, LOT #: 10P88U050-001
Degrees Fahrenheit

Daily Peak Environmental Data From Weather Station #2 at TSA 1
Date: September 2 - October 1, 1991

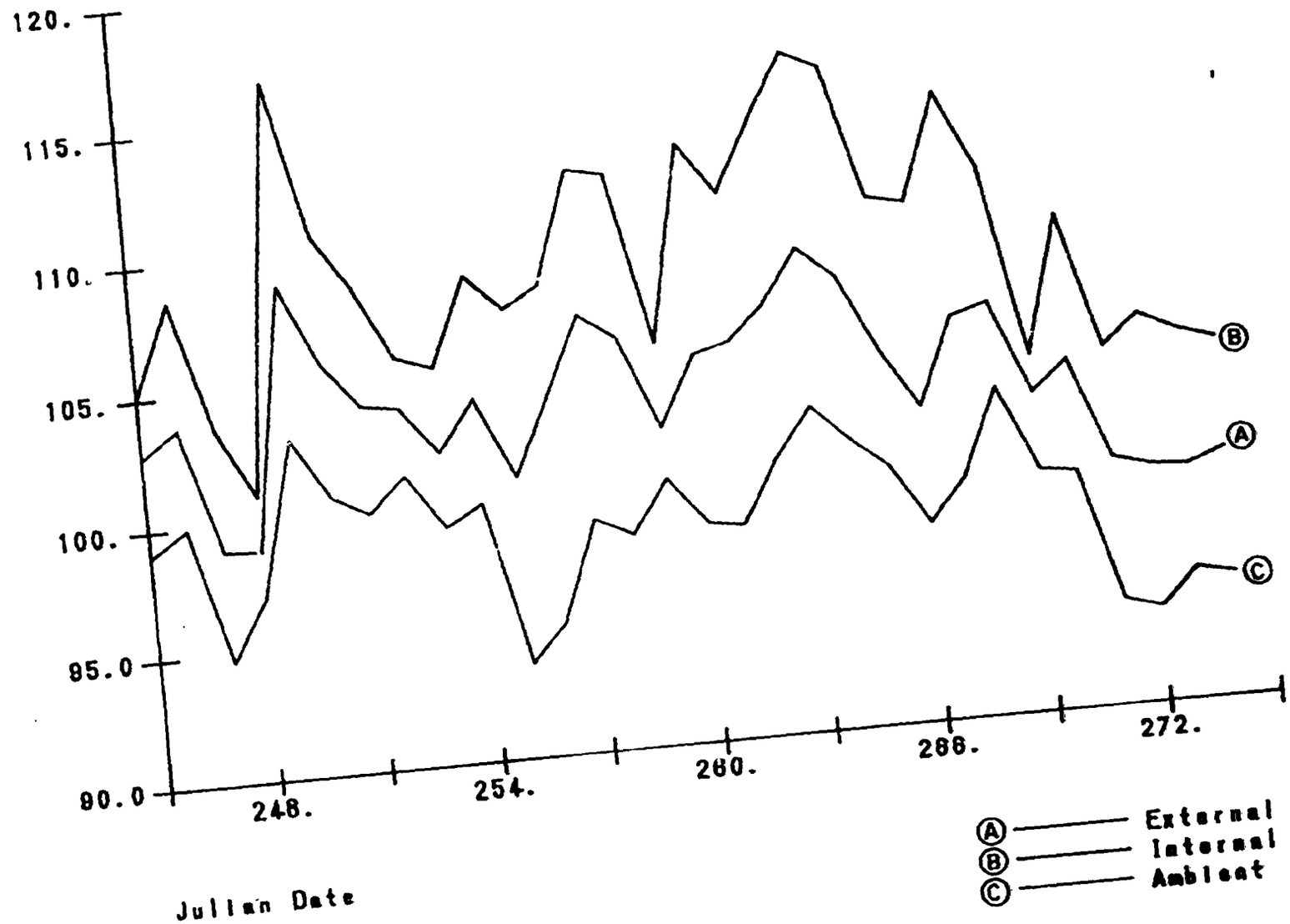

ITEM: PROJ. 81N HE RAP M650
DODIC: D824, LOT #: 10P88U050-001
Degrees Fahrenheit

Daily Peak Environmental Data From Weather Station #2 at TSA 1
Date: June 4 - July 18, 1991

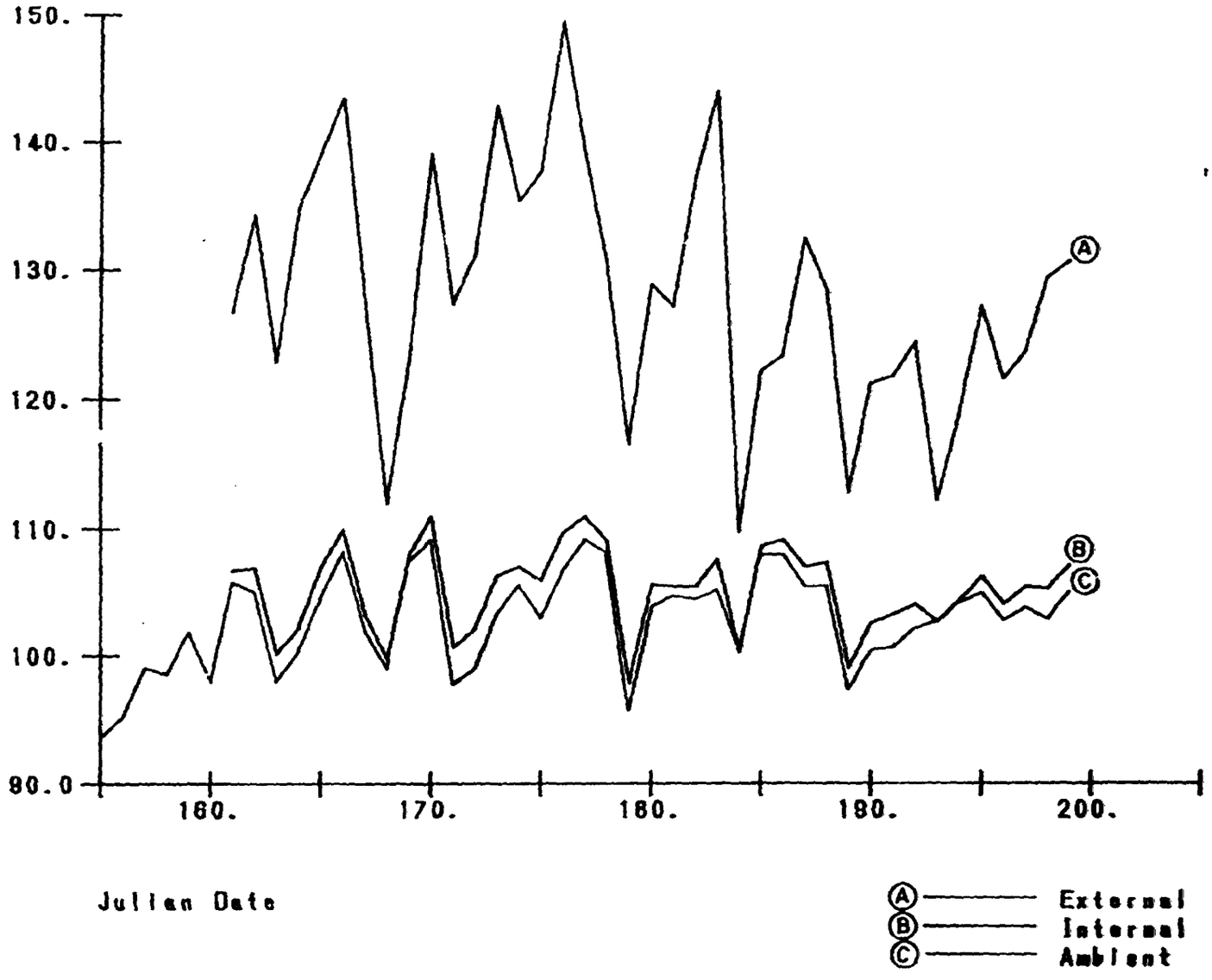

ITEM: CHG, PROP 8IN WB M188A1 W/O PRIMER
DODIC: D662, LOT #: IND85D-070342
Degrees Fahrenheit

Daily Peak Environmental Data From Weather Station #2 at TSA 1
Date: July 19 - September 1, 1991

ITEM: CHG, PROP 8IN WB M188A1 W/O PRIMER
DODIC: D862, LOT #: IND85D-070342
Degrees Fahrenheit

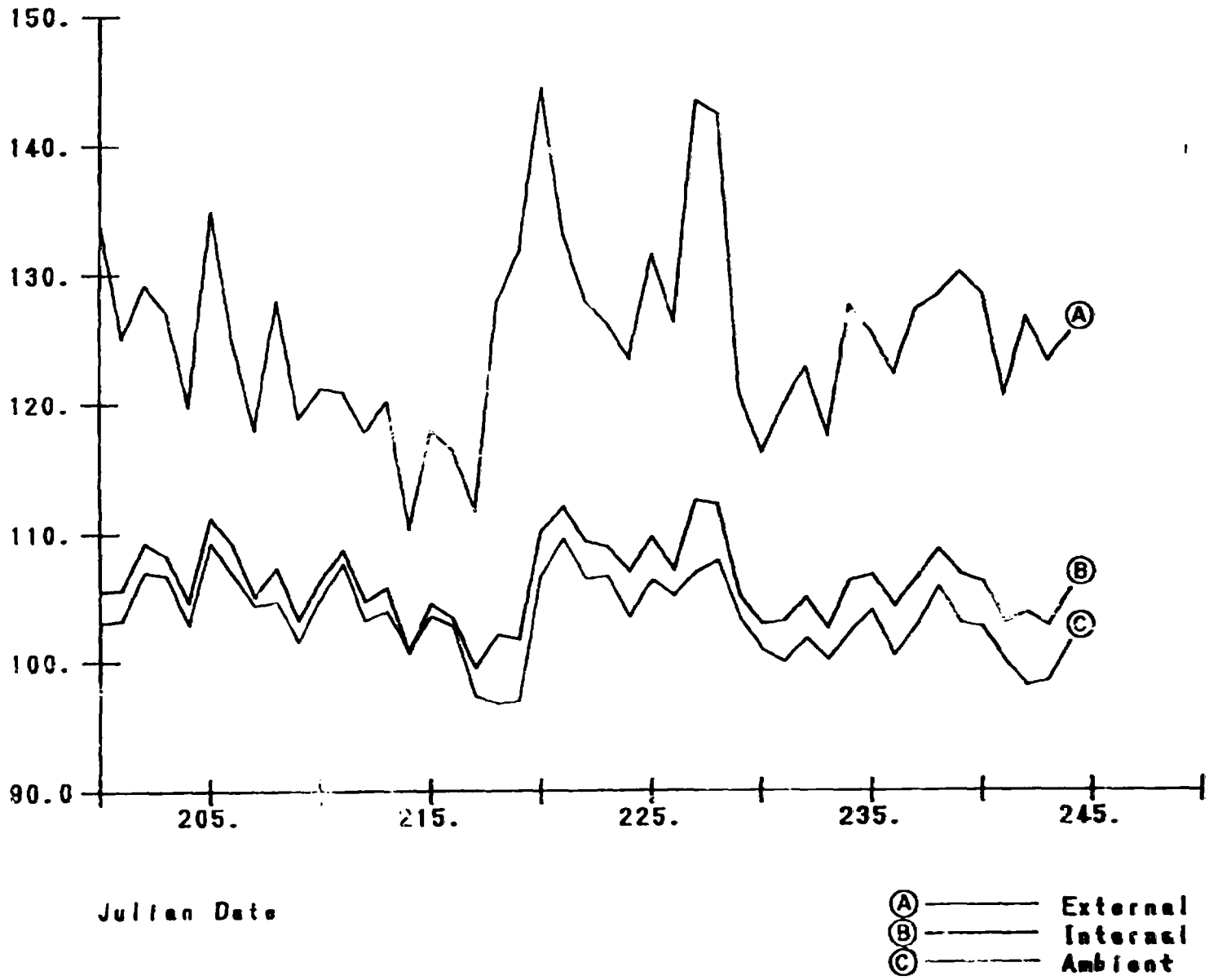

Daily Peak Environmental Data From Weather Station #2 at TSA 1
Date: September 2 - October 1, 1991

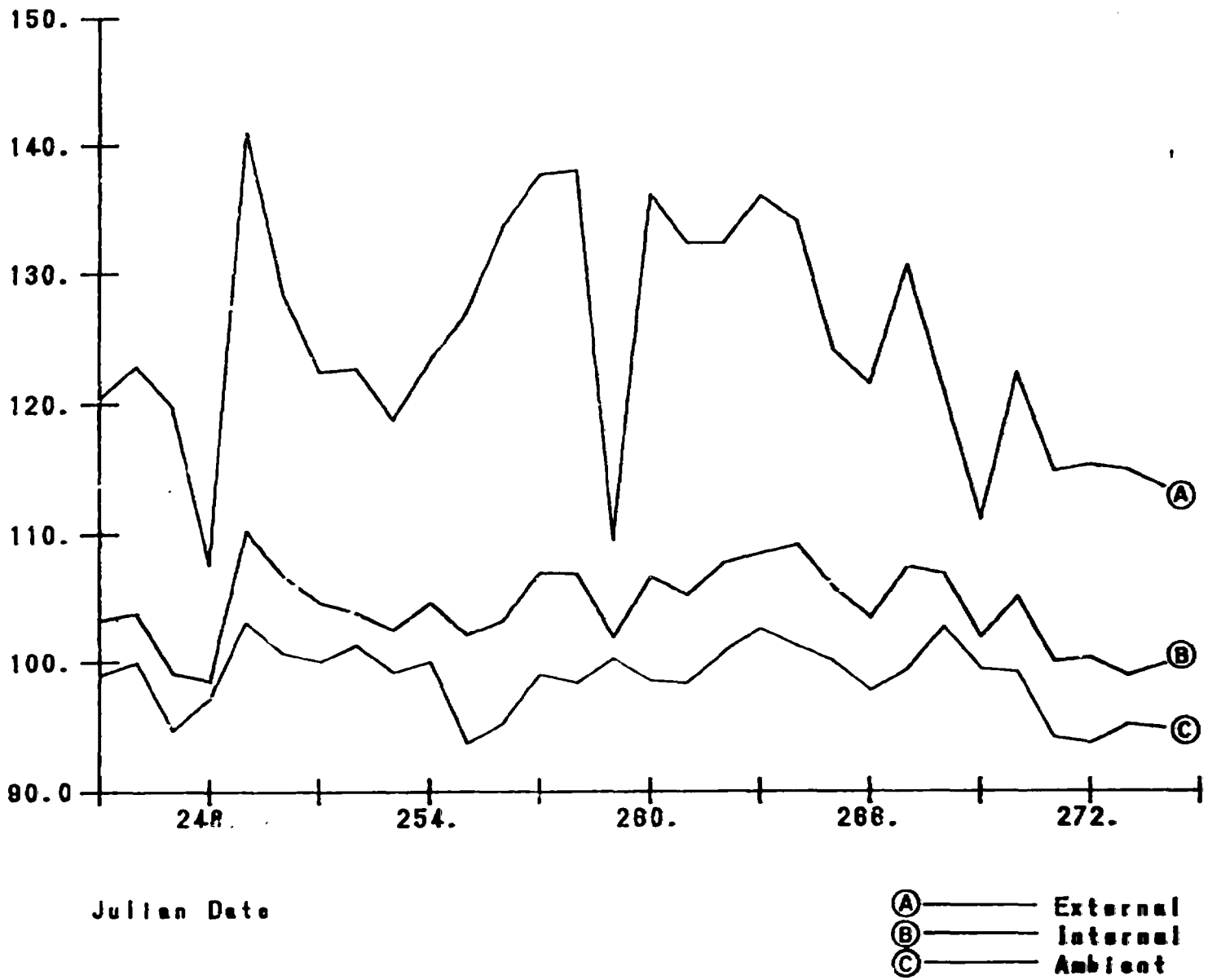

ITEM: CHG, PROP 8IN WB M188A1 W/O PRIMER
CODIC: D662, LOT #: IND85D-070342
Degrees Fahrenheit

Daily Peak Environmental Data From Weather Station #2 at TSA 1
Date: June 4 - July 18, 1991

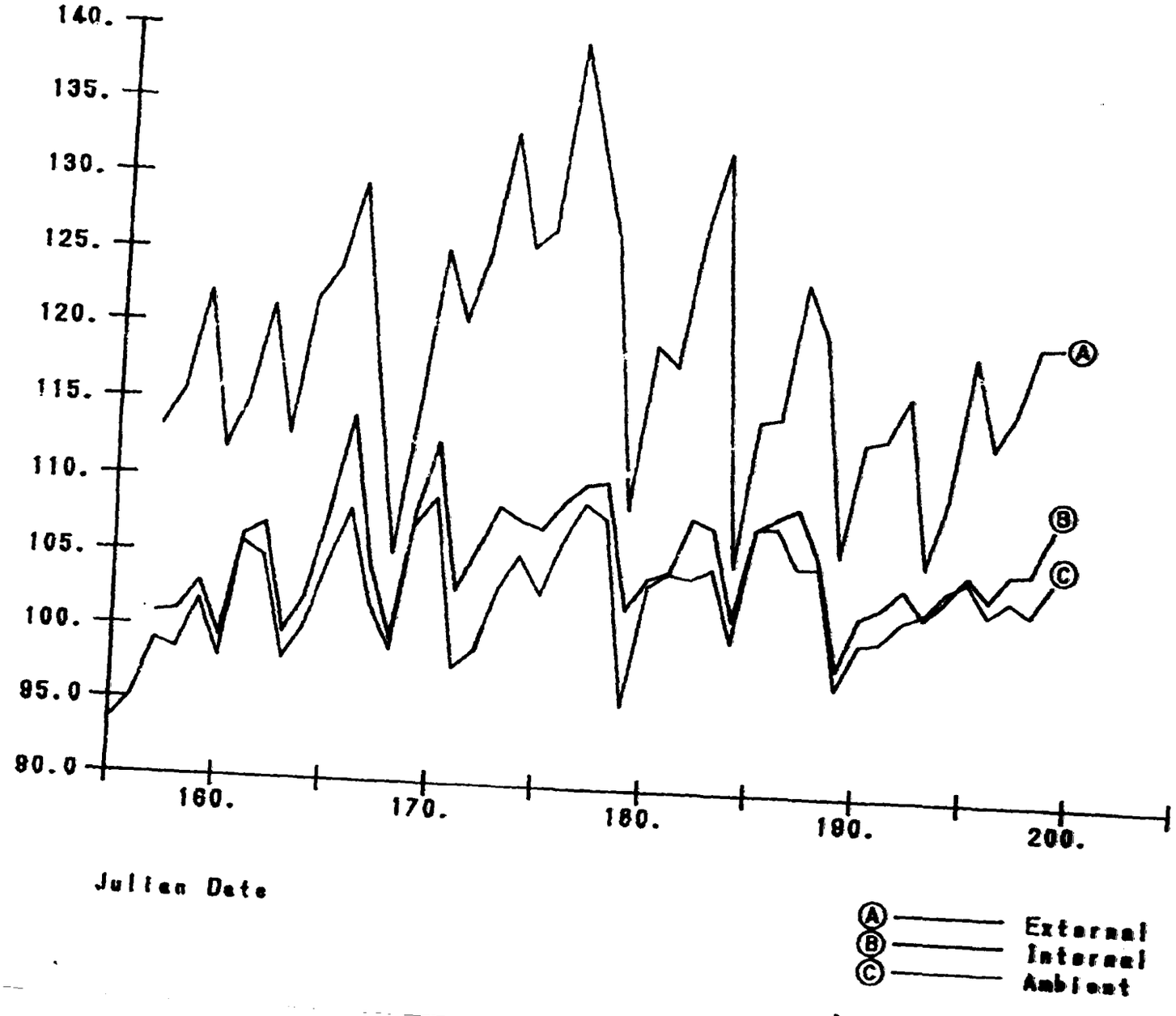

ITEM: FUZE, MTSQ M577/ M577A1 W/O BOOSTE
DODIC: N285, LOT #: BWV-7-14
Degrees Fahrenheit

Daily Peak Environmental Data From Weather Station #2 at TSA 1
Date: July 18 - September 1, 1991

ITEM: FUZE, MTSQ M577/ M577A1 W/O BOOSTE
DODIC: N285, LOT #: BWV-7-14
Degrees Fahrenheit

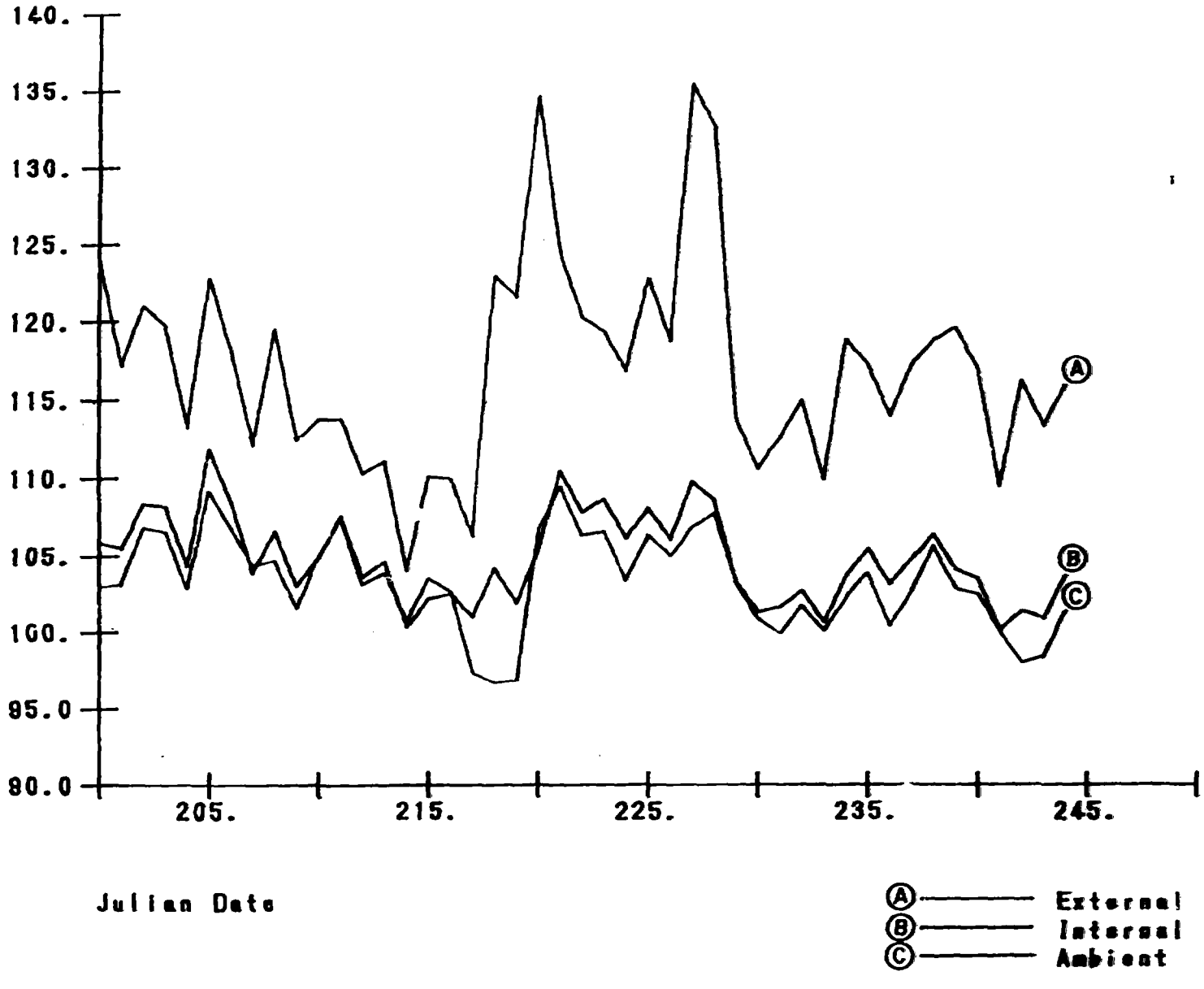

Daily Peak Environmental Data From Weather Station #2 at TSA 1
Date: September 2 - October 1, 1991

ITEM: FUZE, MTSQ M577/ M577A1 W/O BOOSTE
DODIC: N285, LOT #: BWV-7-14
Degrees Fahrenheit

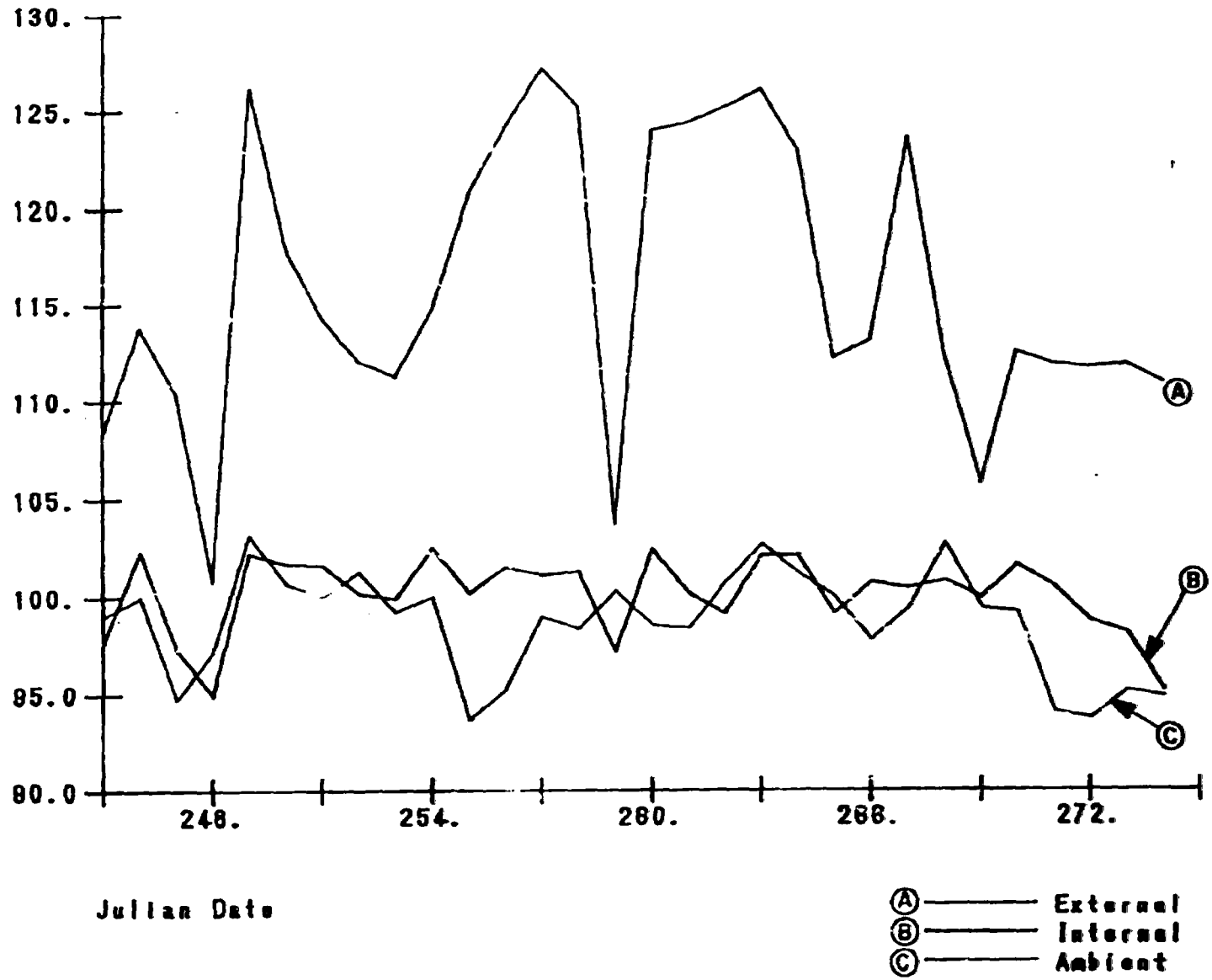

Daily Peak Environmental Data From Weather Station #2 at TSA 1
Date: June 4 - July 18, 1991

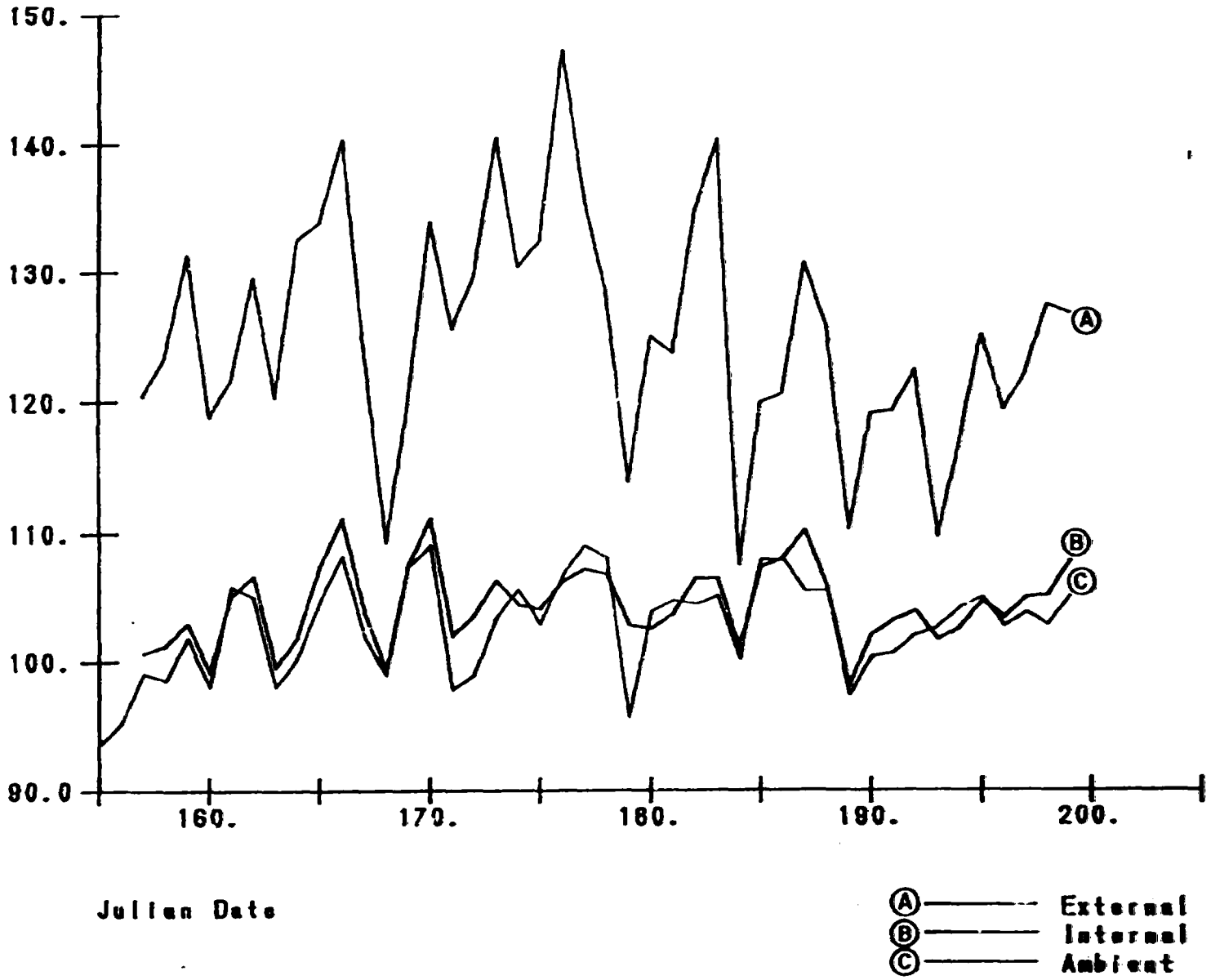

ITEM: FUZE, MTSQ M577/ M577A1 W/O BOOSTE
DODIC: N285, LOT #: BWV82C012-017
Degrees Fahrenheit

Daily Peak Environmental Data From Weather Station #2 at TSA 1
Date: July 18 - September 1, 1981

ITEM: FUZE, MTSQ M577/ M577A1 W/O BOOSTE
DODIC: N285, LOT #: BWV82C012-017
Degrees Fahrenheit

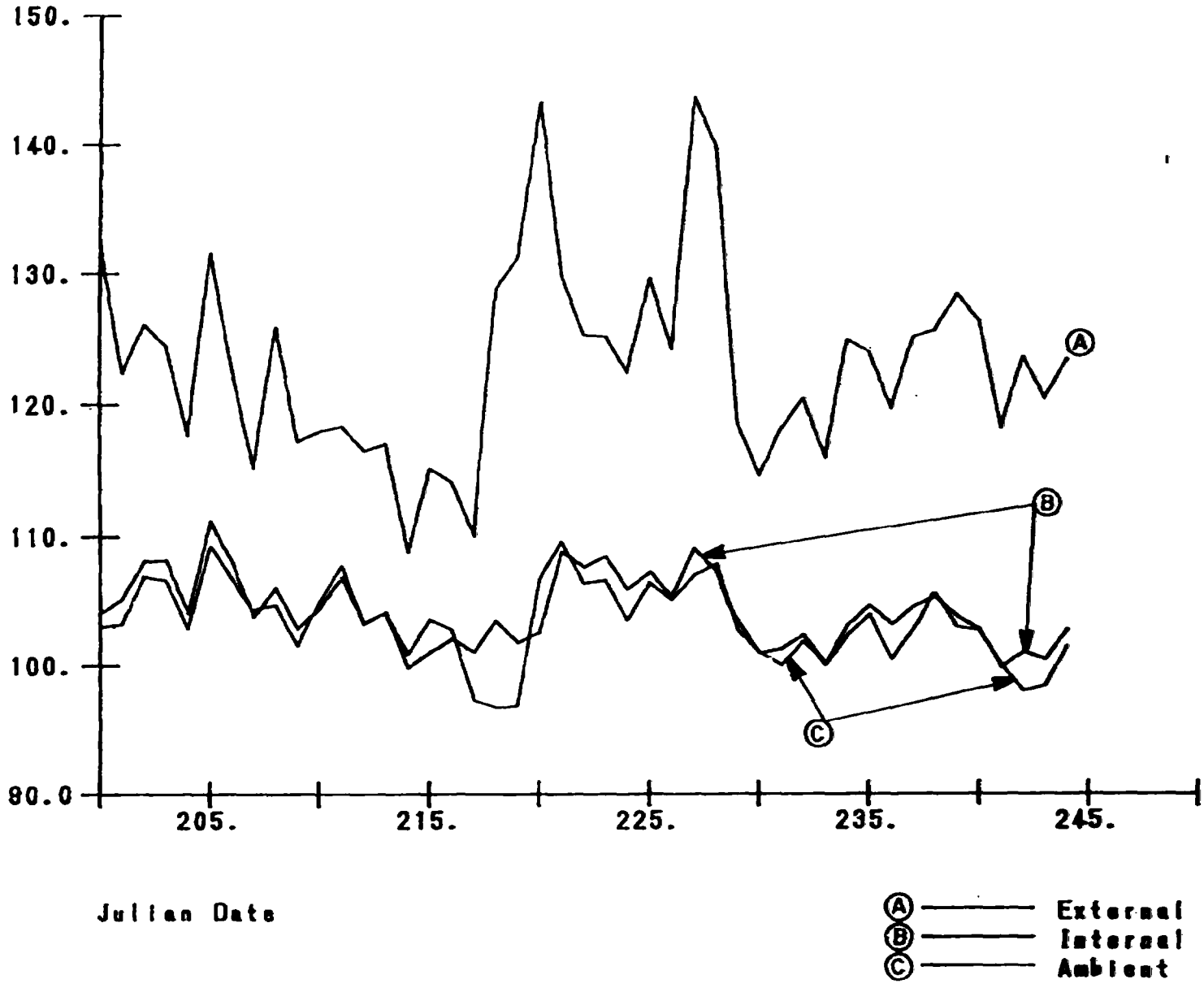

Daily Peak Environmental Data From Weather Station #2 at TSA 1
Date: September 2 - October 1, 1991

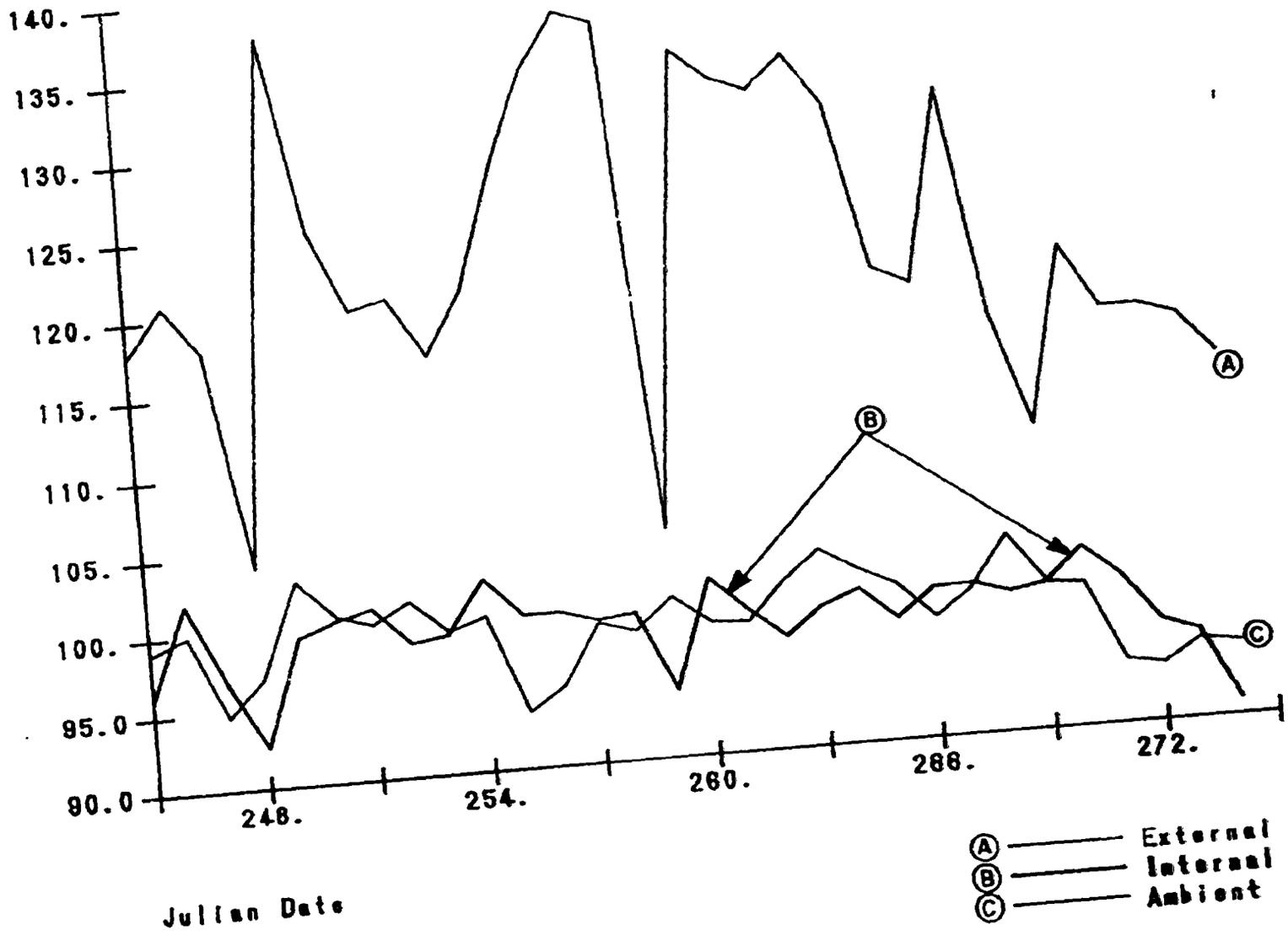

ITEM: FUZE, MTSQ M577/ M577A1 W/O BOOSTE
DODIC: N285, LOT #: BWV82C012-017
Degrees Fahrenheit

Daily Peak Environmental Data From Weather Station #2 at TSA 1
Date: June 4 - July 18, 1991

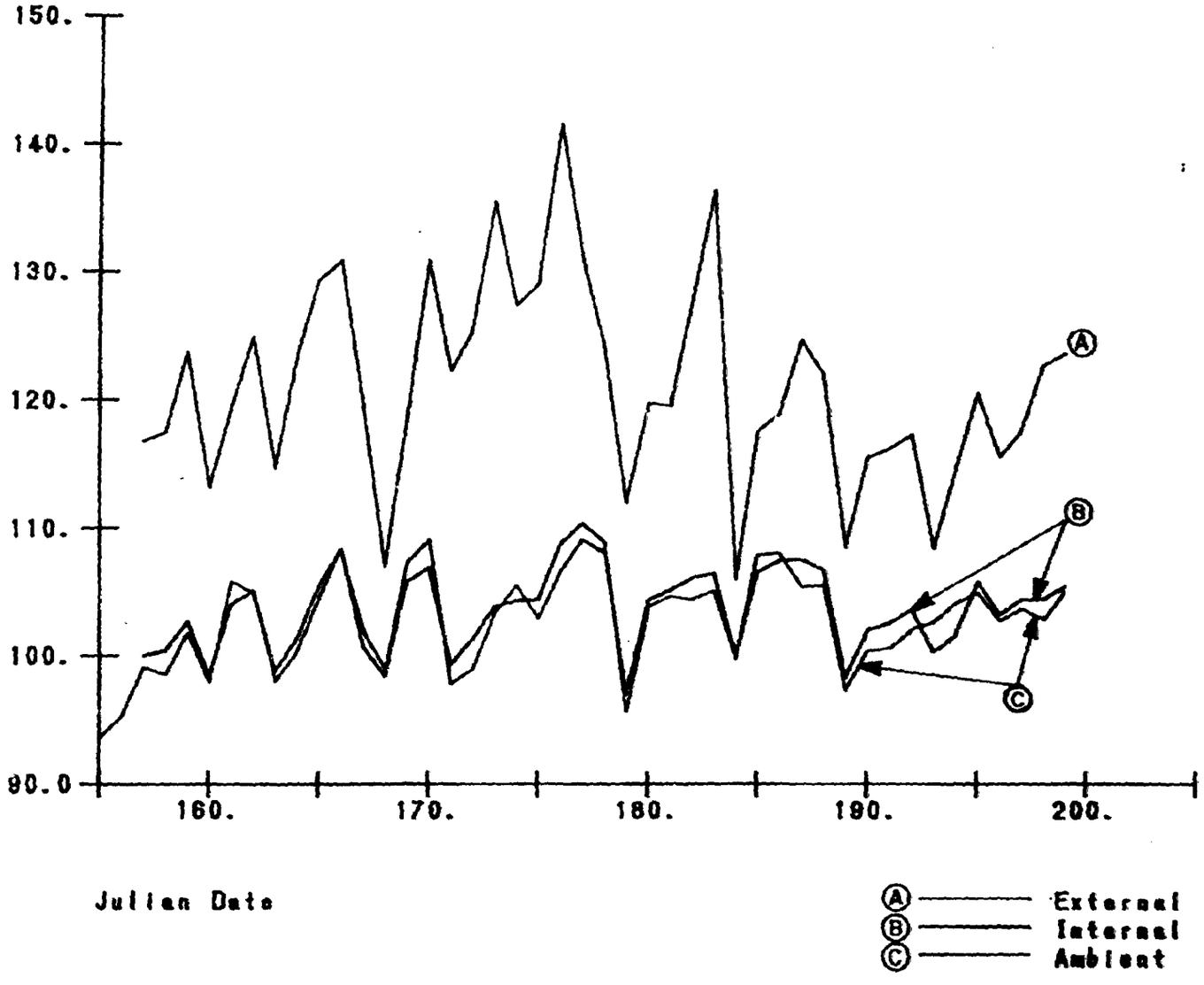

ITEM: FUZE, PROX M732 NON-PROP PKG
DODIC: N484, LOT #: LS-83L013-003
Degrees Fahrenheit

Daily Peak Environmental Data From Weather Station #2 at TSA 1
Date: July 18 - September 1, 1991

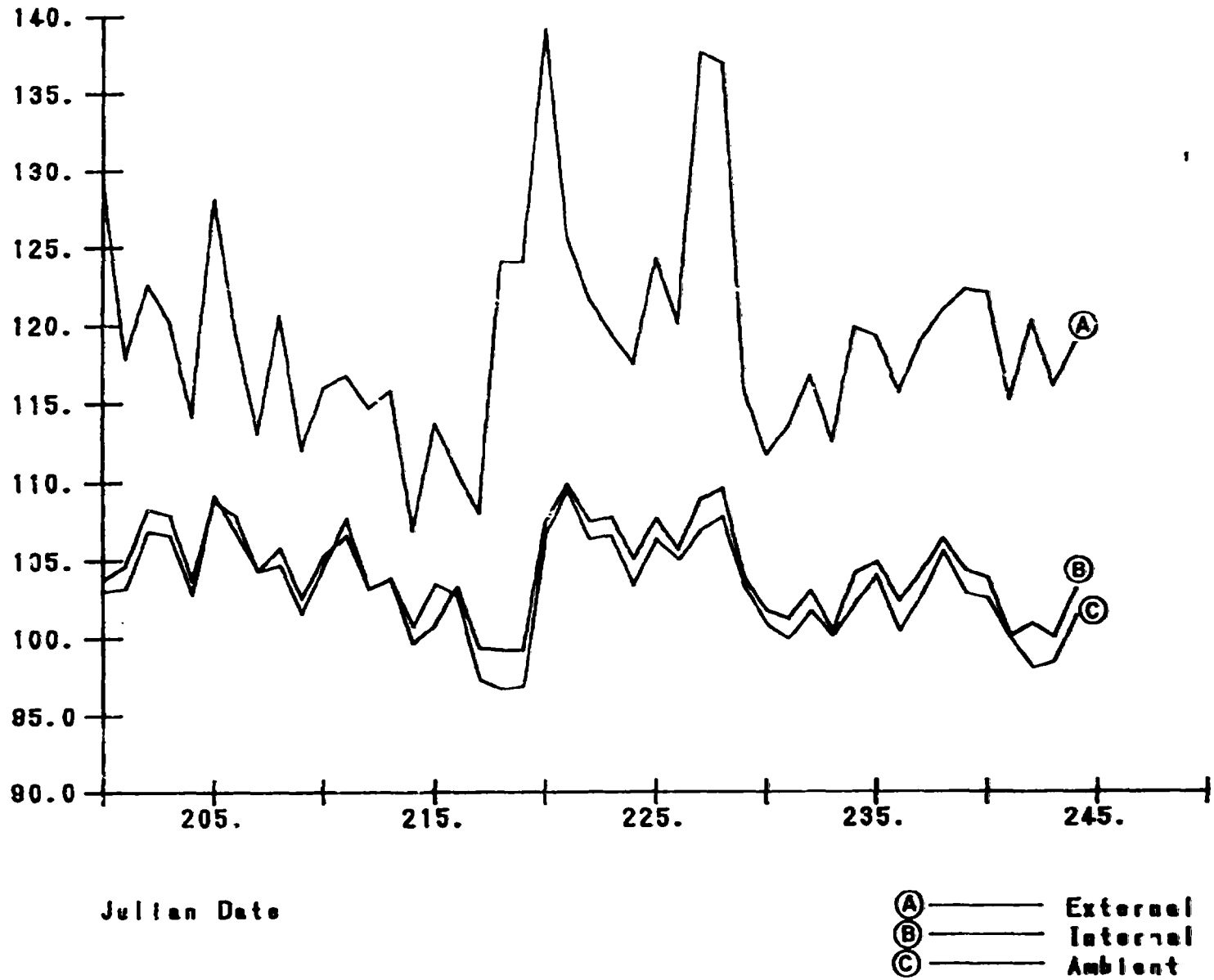

ITEM: FUZE, PROX M732 NON-PROP PKG
DODIC: N484, LOT #: LS-83L013-003
Degrees Fahrenheit

Daily Peak Environmental Data From Weather Station #2 at TSA 1
Date: September 2 - October 1, 1991

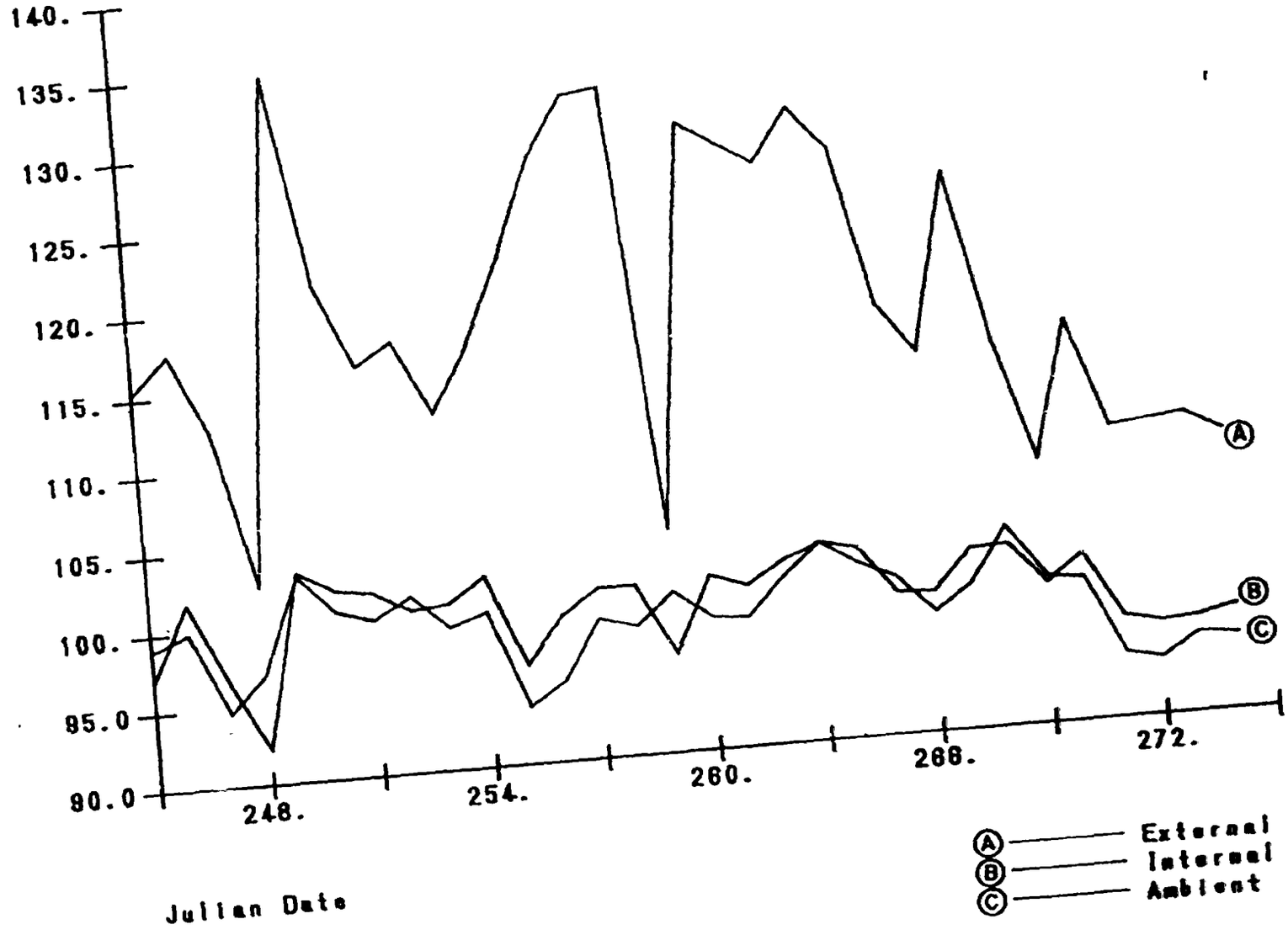

ITEM: FUZE, PROX M732 NON-PROP PKG
DODIC: N484, LOT #: LS-83L013-003
Degrees Fahrenheit

Daily Peak Environmental Data From Campbell Logger #1 at TSA 1
Date: June 4 - July 18, 1991

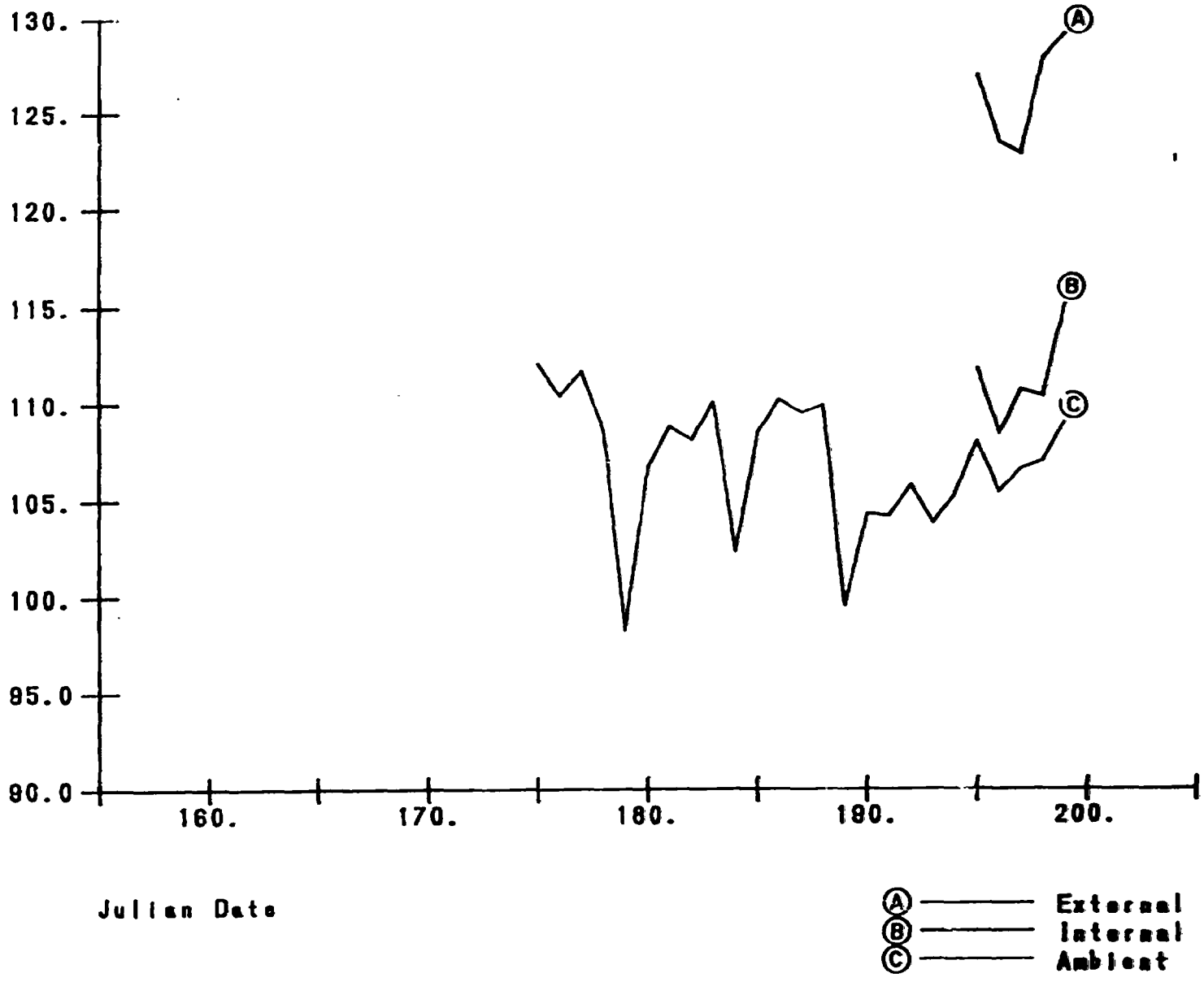

ITEM: Shillelagh Missile
DODIC: PA45, LOT #: PHI-8-31C
Degrees Fahrenheit

Daily Peak Environmental Data From Campbell Logger #1 at TSA 1
Date: July 19 - September 1, 1991

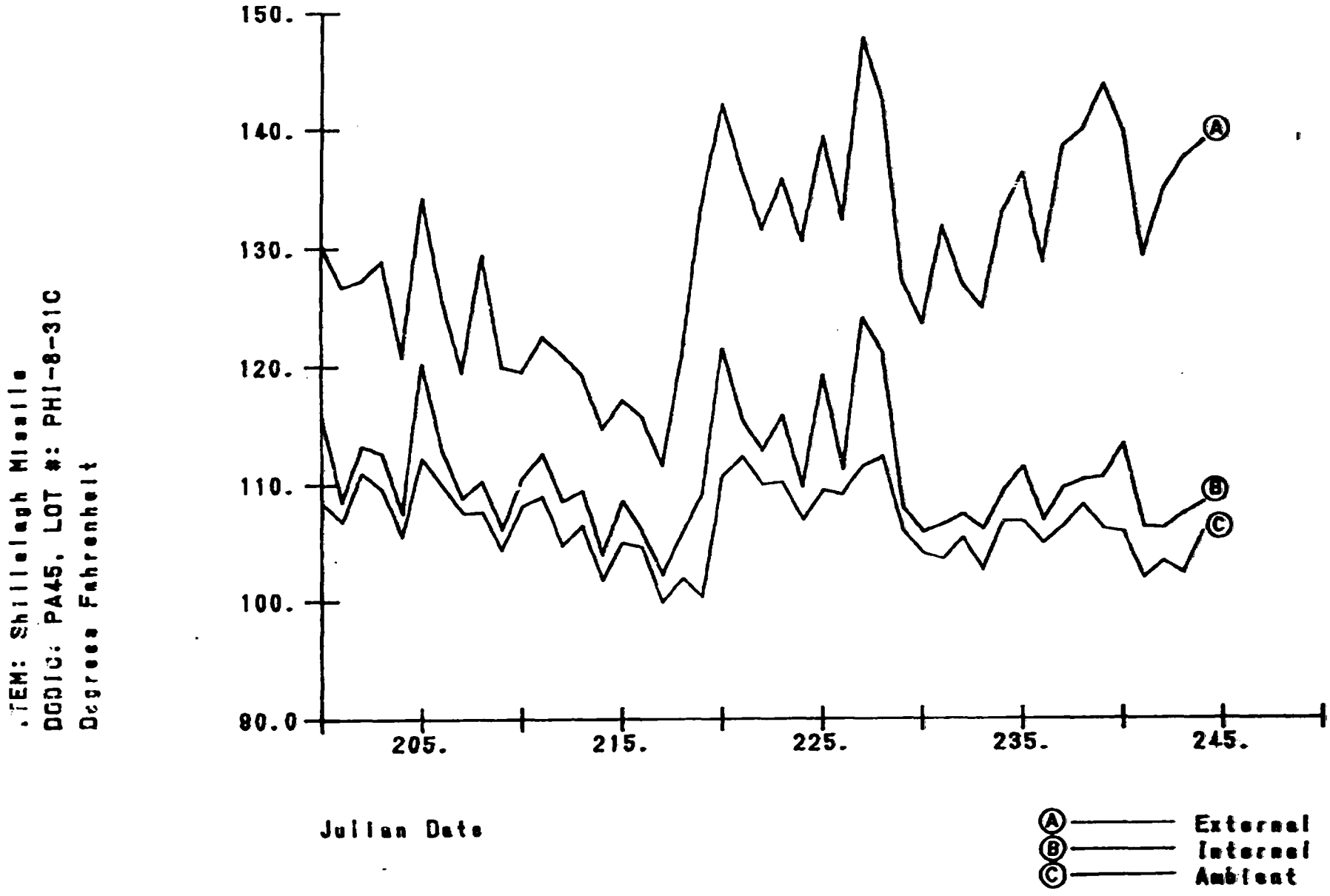

Daily Peak Environmental Data From Campbell Logger #1 at TSA 1
Date: September 2 - October 1, 1991

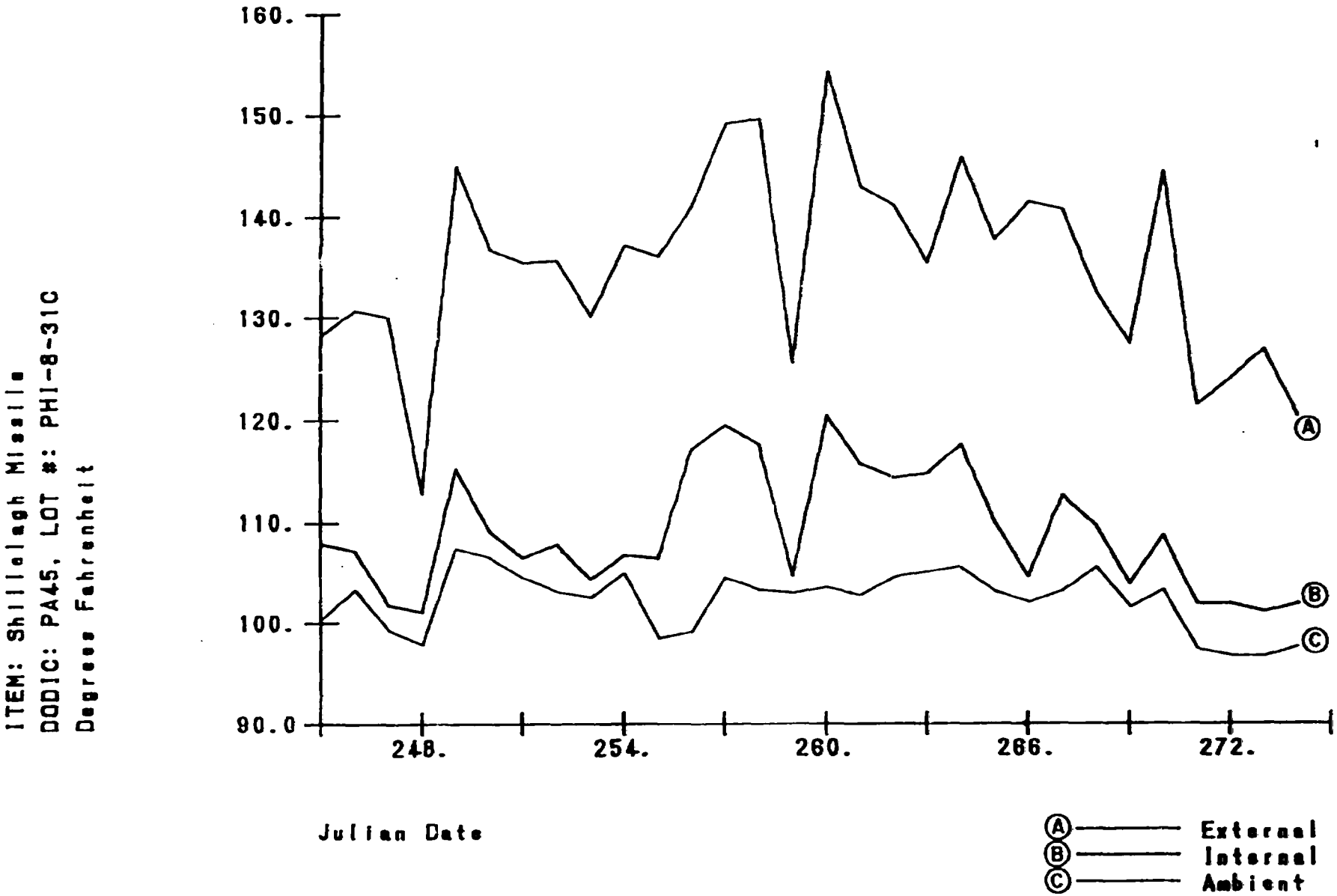

Daily Peak Environmental Data From Weather Station #2 at TSA 1
Date: June 4 - July 18, 1991

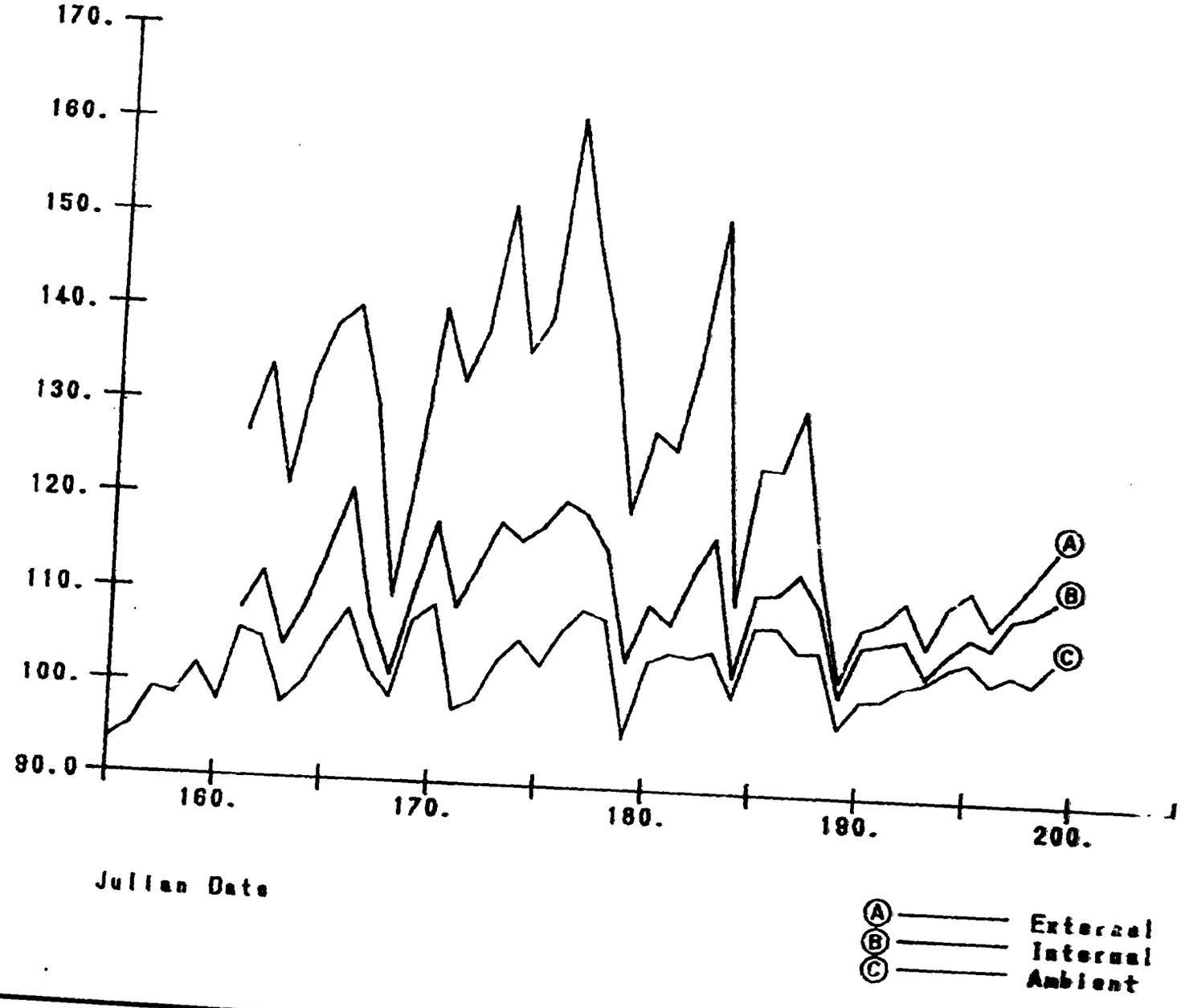

ITEM: TOW 2
DODIC: PB93, LOT #: HAQ-3148-4
Degrees Fahrenheit

Daily Peak Environmental Data From Weather Station #2 at TCA 1
Date: July 19 - September 1, 1991

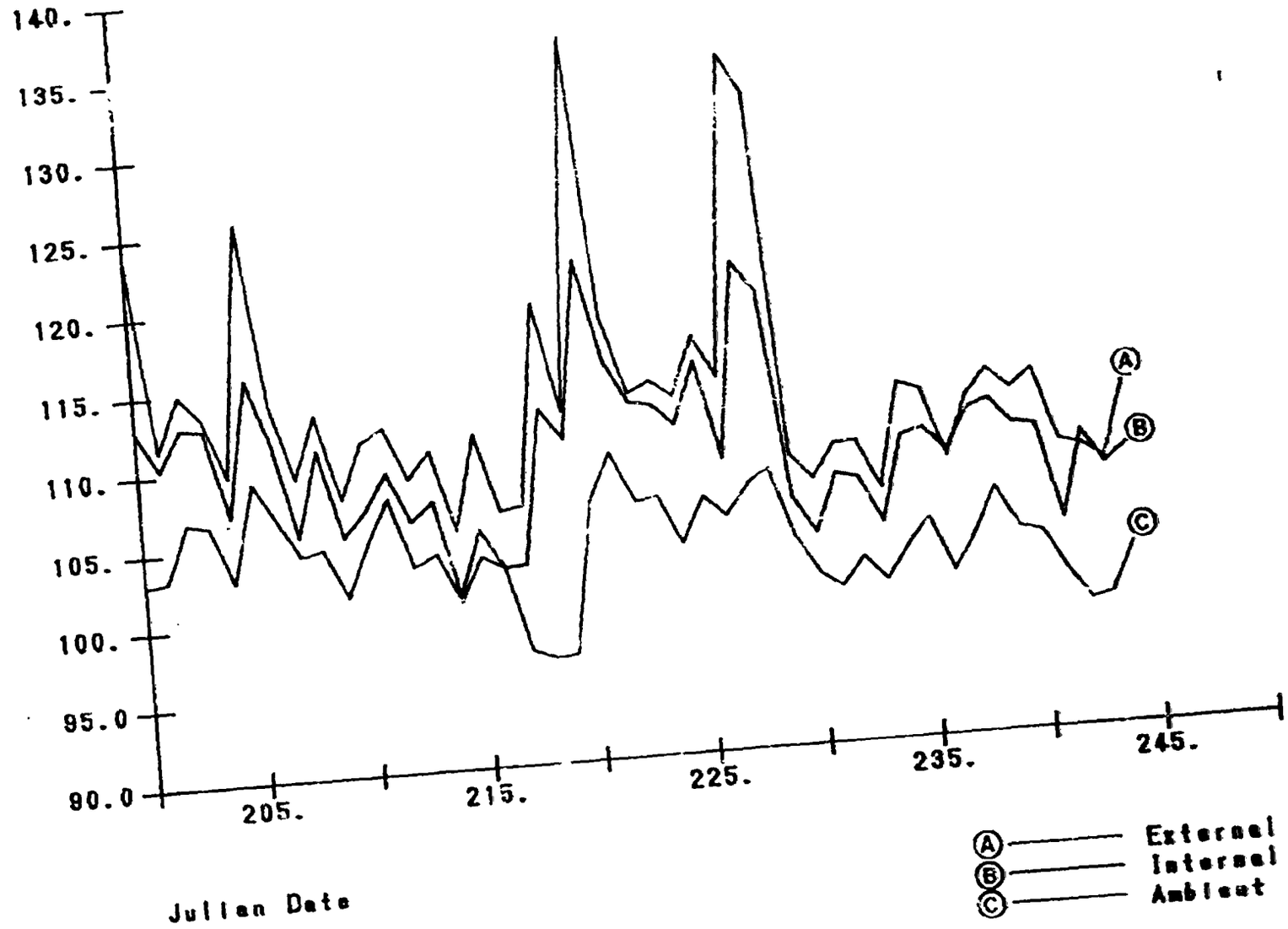

ITEM: TOW 2
DODIC: PB93, LOT #: HAQ-3148-4
Degrees Fahrenheit

Daily Peak Environmental Data From Weather Station #2 at TSA 1
Date: September 2 - October 1, 1991

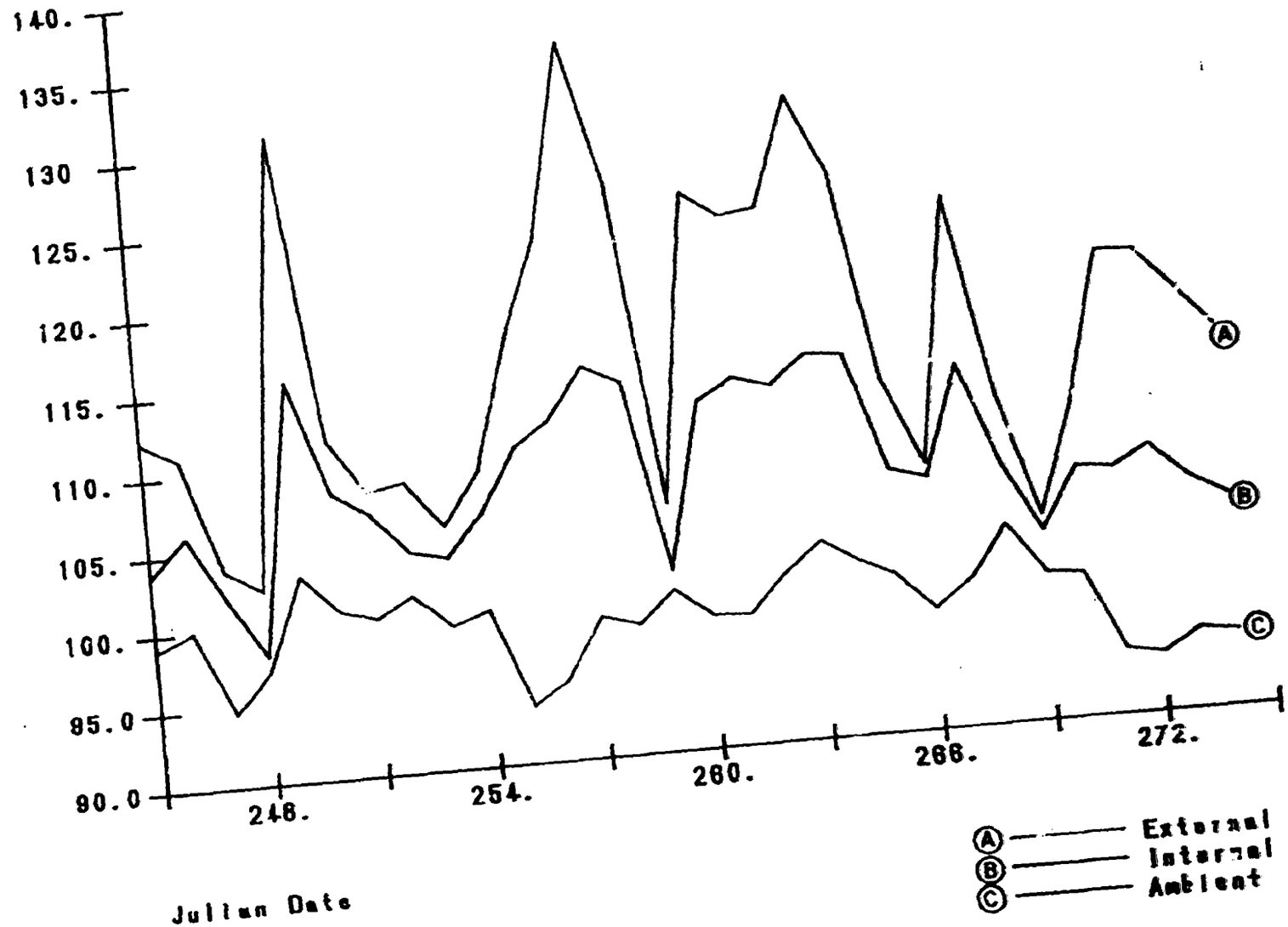

ITEM: TOW 2
DODIC: PB93, LOT #: HAQ-3148-4
Degrees Fahrenheit

Daily Peak Environmental Data From Campbell Logger #2 at TSA 5
Date: July 19 -- September 1, 1991

ITEM: CTG, 4.2IN SMK WP M328A1 W/PD FUZE
DODIC: C708, LOT #: RD-4-7A
Degrees Fahrenheit

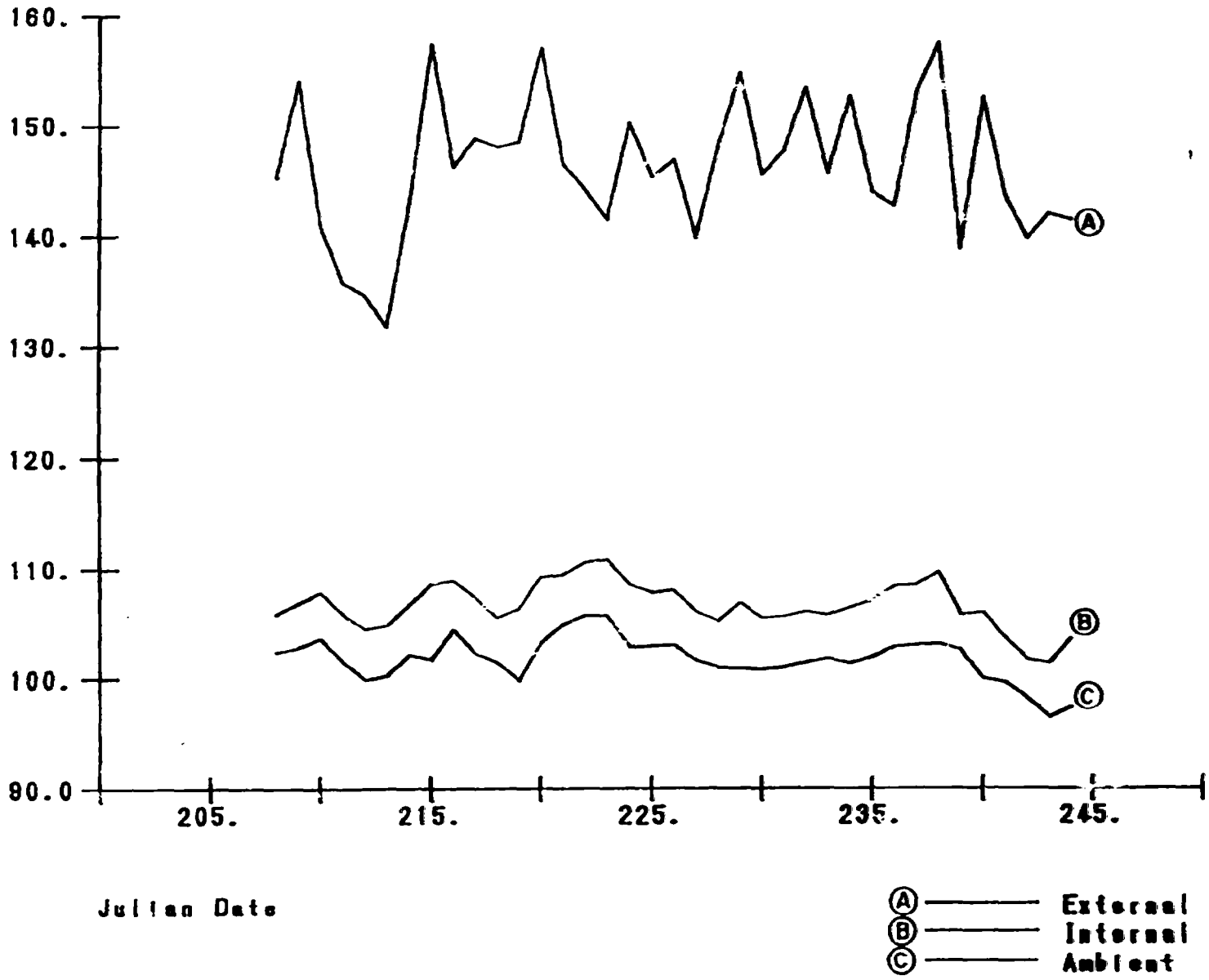

Daily Peak Environmental Data From Campbell Logger #2 at TSA 5
Date: September 2 - October 16, 1981

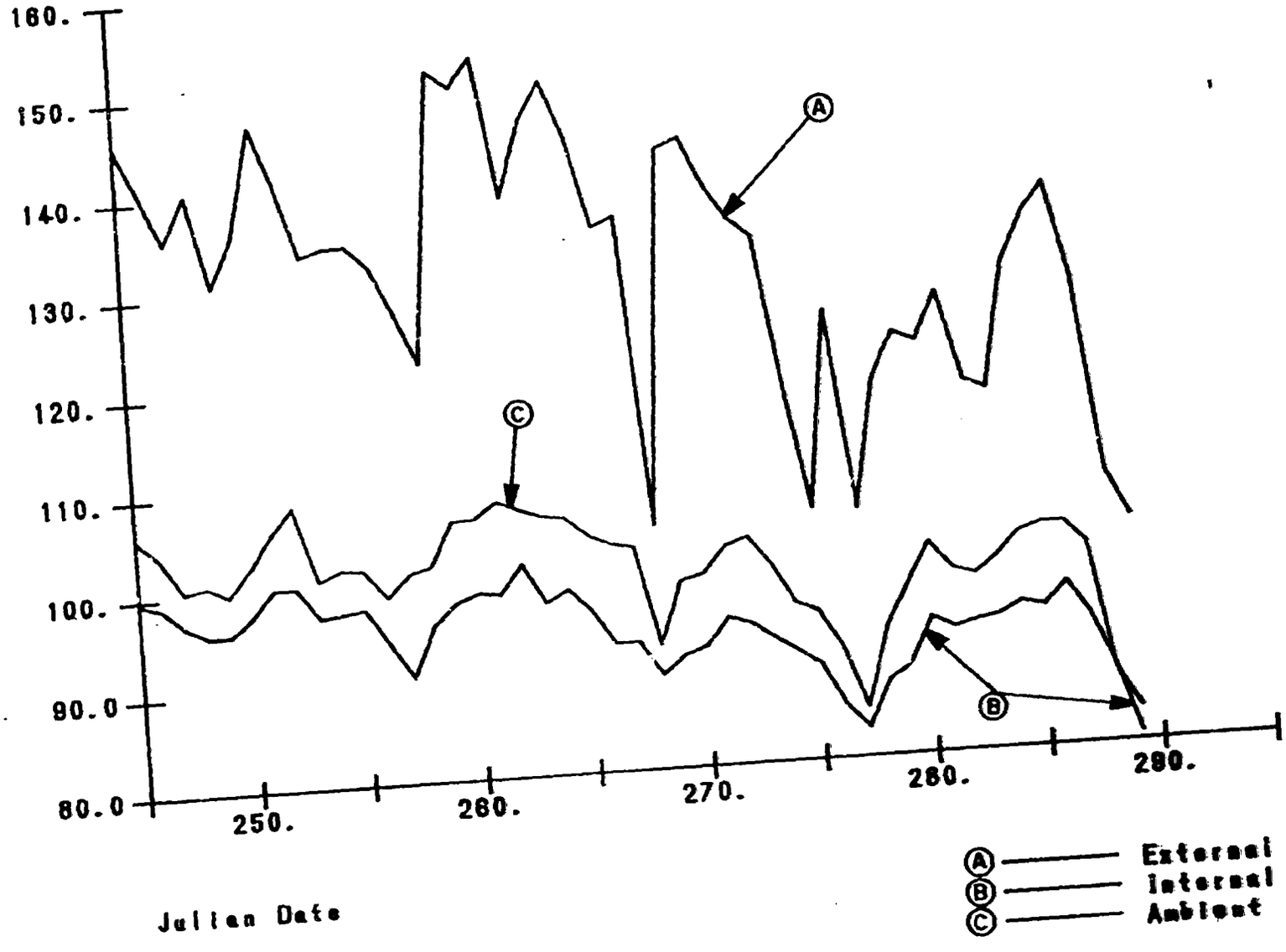

ITEM: CTG, 4.2IN SMK WP M328A1 W/PD FUZE
DODIC: C708, LOT #: RD-4-7A
Degrees Fahrenheit

Daily Peak Environmental Data From Campbell Logger #2 at TSA 5
Date: October 17 - November 30, 1991

ITEM: CTG, 4.2IN SMK WP M328A1 W/PD FUZE
DODIC: C708, LOT #: RD-4-7A
Degrees Fahrenheit

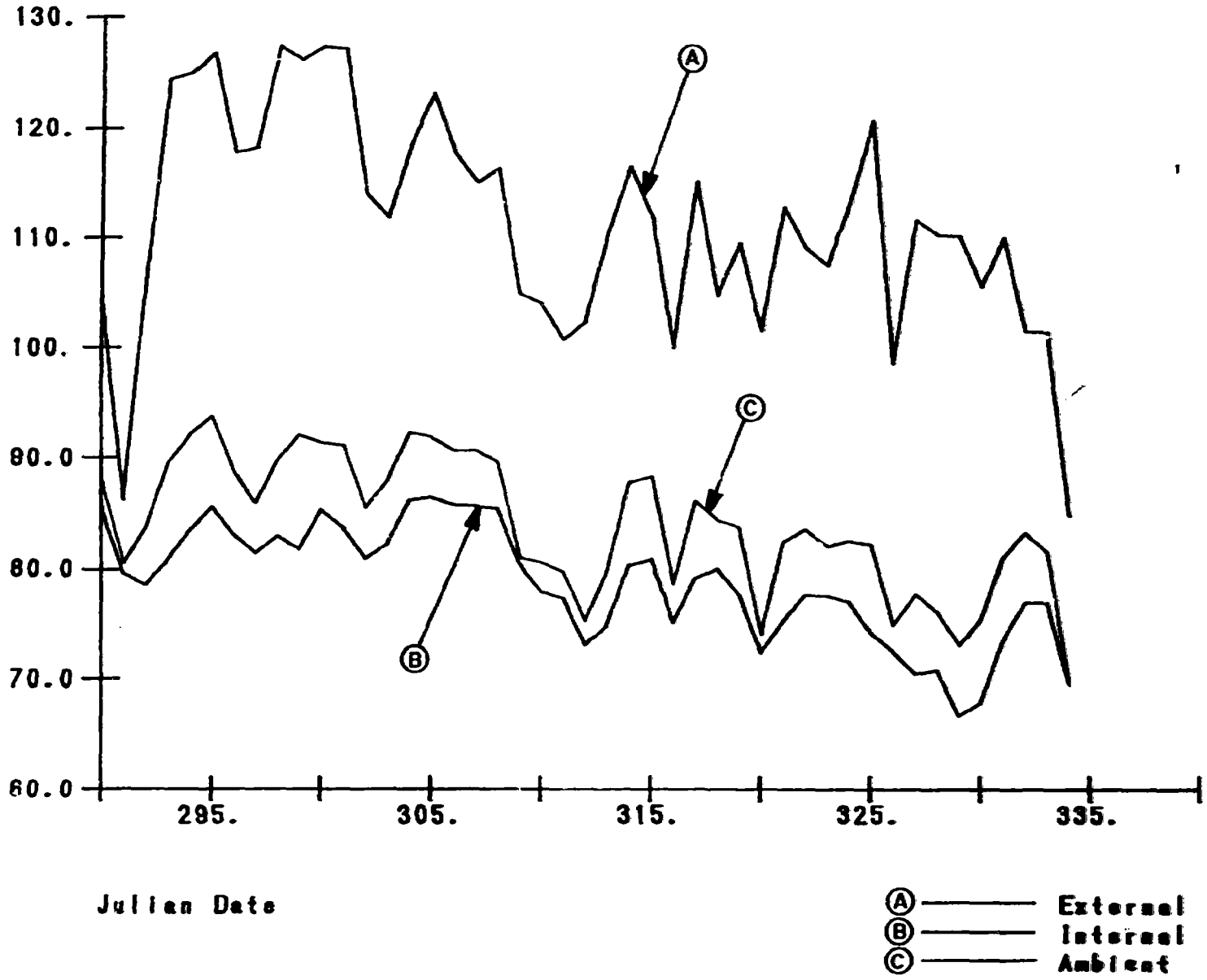

Daily Peak Environmental Data From Campbell Logger #2 at TSA 5
Date: July 18 - September 1, 1981

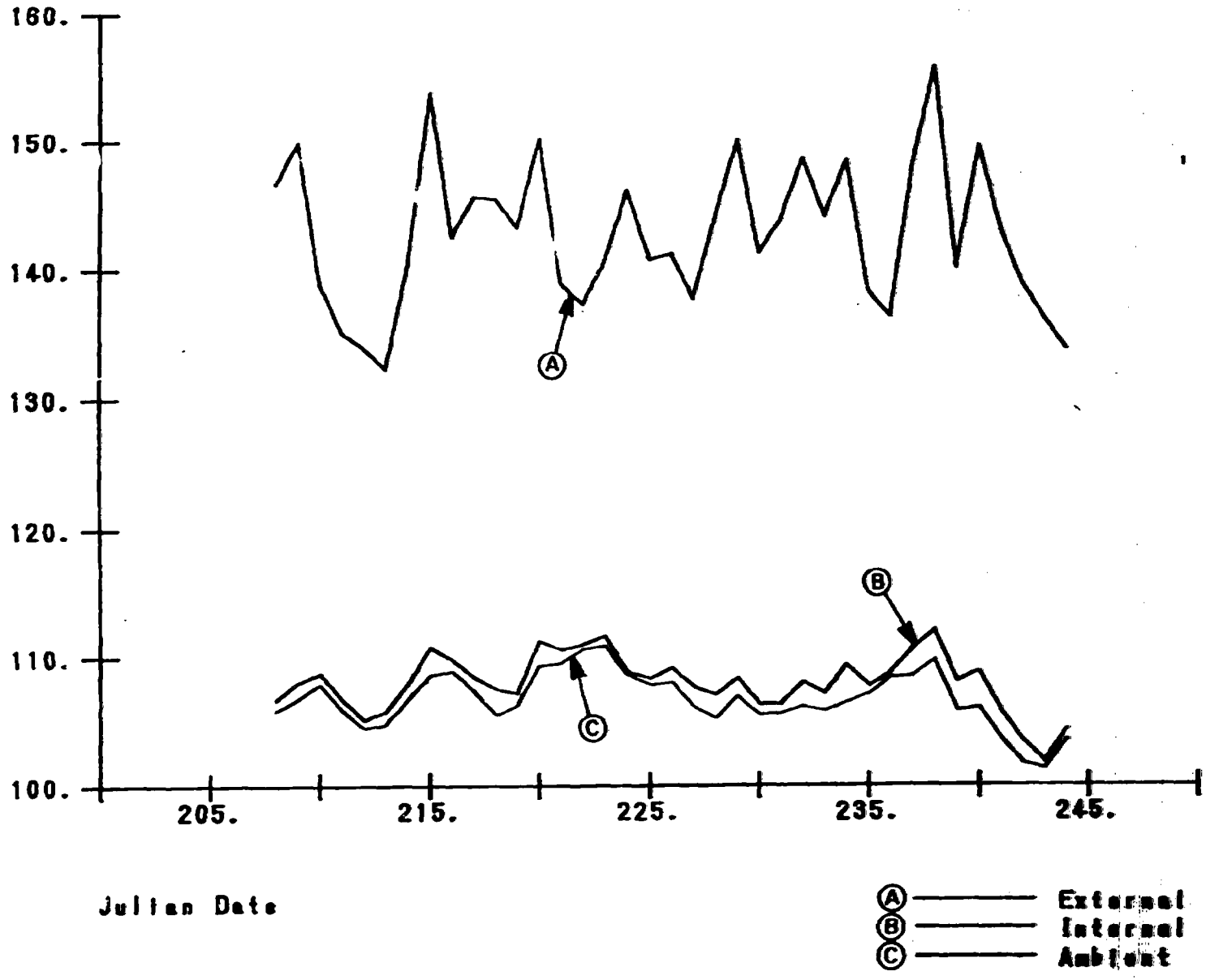

ITEM: CTG. 120MM HEAT-MP-T M83C
DODIC: C787, LOT #: MM-898-501-003
Degrees Fahrenheit

Daily Peak Environmental Data From Campbell Logger #2 at TSA 5
Date: September 2 - October 18, 1991

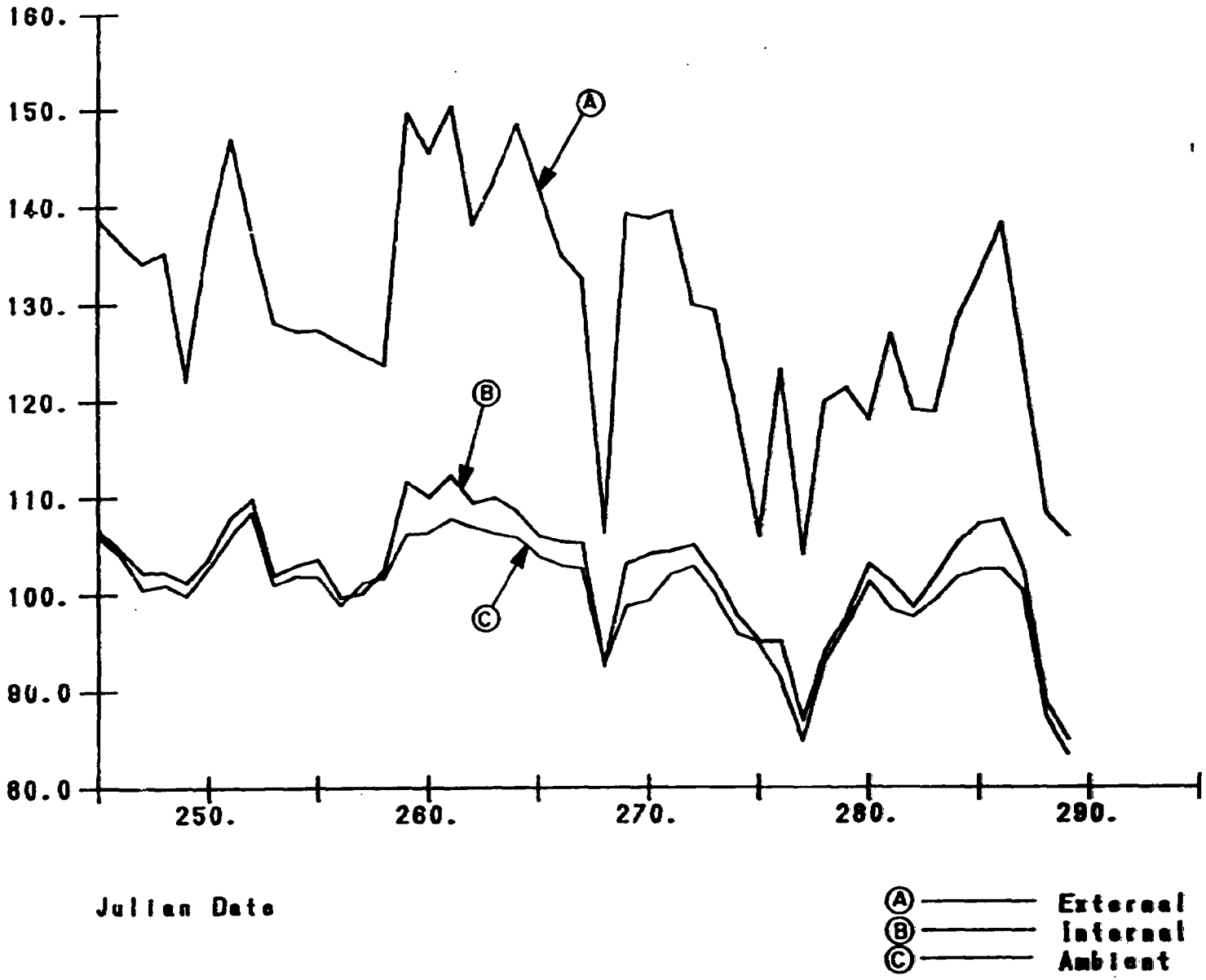

ITEM: CTG, 120MM HEAT-MP-T M830
DODIC: C787, LOT #: MM-896-501-003
Degrees Fahrenheit

Daily Peak Environmental Data From Campbell Logger #2 at TSA 5
Date: October 17 - November 30, 1981

ITEM: CTG, 120MM HEAT-MP-T M830
DODIC: C787, LOT #: MM-898-501-003
Degrees Fahrenheit

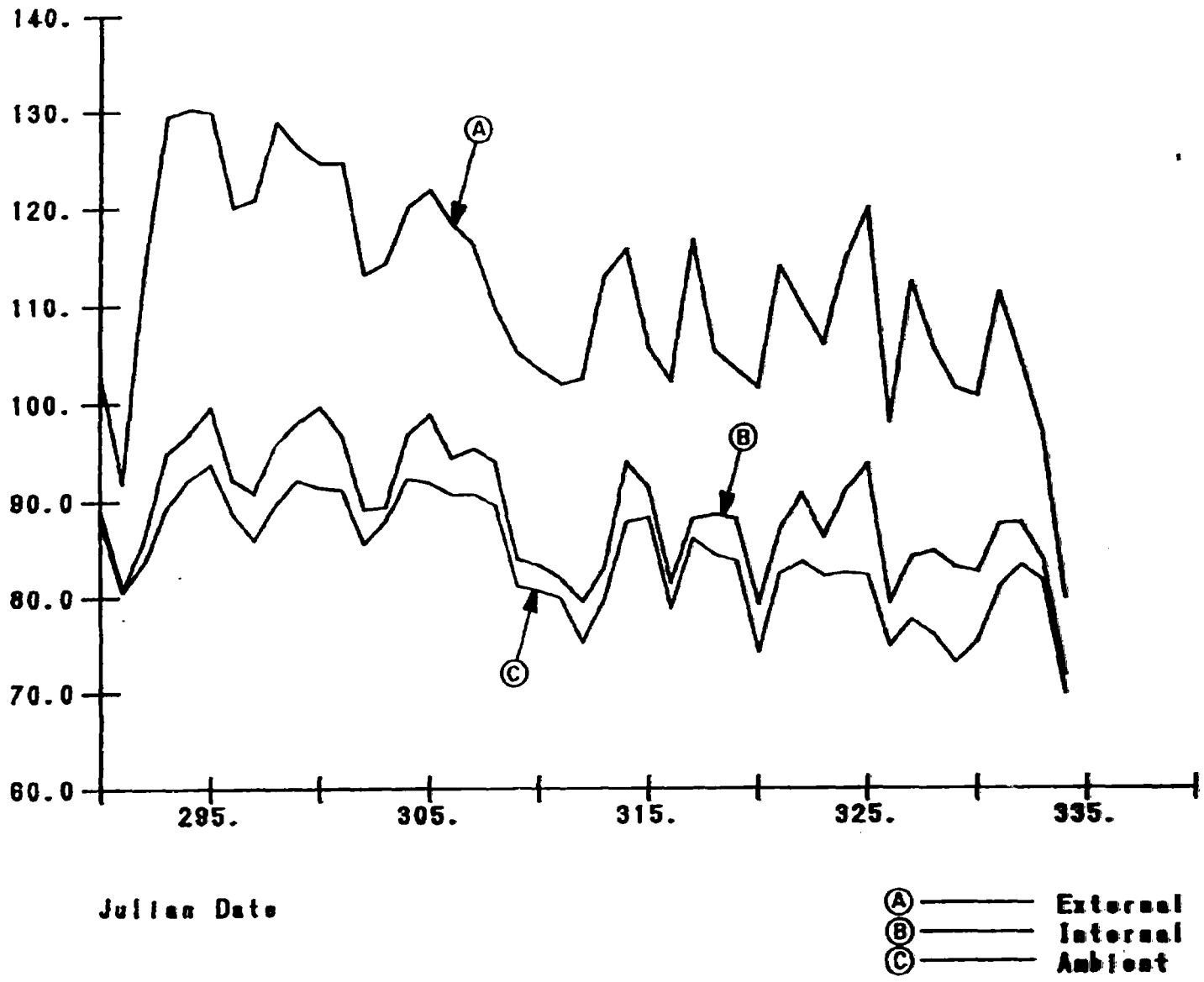

Daily Peak Environmental Data From Campbell Logger #2 at TSA 5
Date: July 19 - September 1, 1991

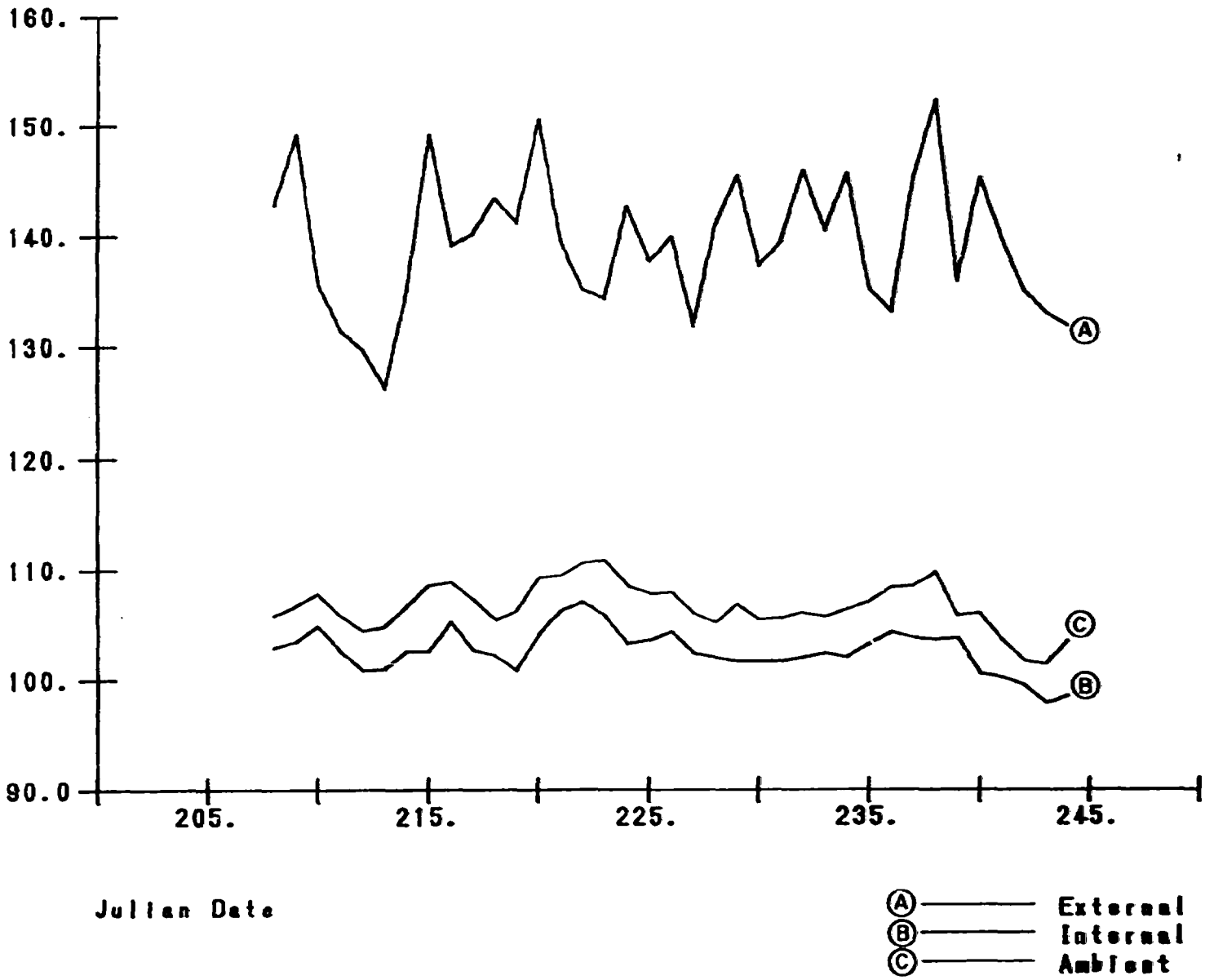

ITEM: CHG. PROP 155MM GB M3A1
DODIC: D540, LOT #: RAD-69169-73
Degrees Fahrenheit

Daily Peak Environmental Data From Campbell Logger #2 at TSA 5
Date: September 2 - October 16, 1991

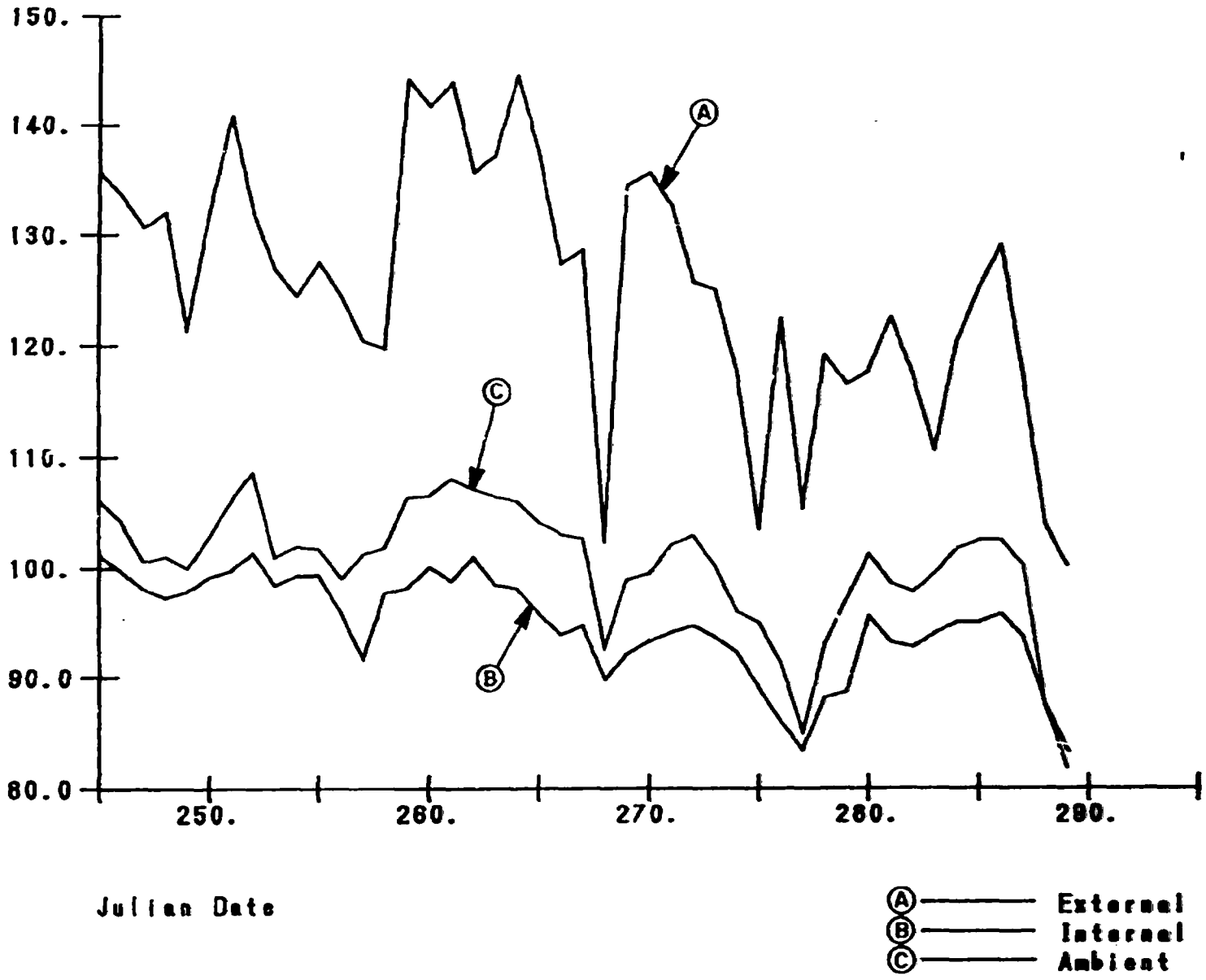

ITEM: CHG. PROP 155MM QB M3A1
DODIC: D540, LOT #: RAD-69169-73
Degrees Fahrenheit

Daily Peak Environmental Data From Campbell Logger #2 at TSA 5
Date: October 17 - November 30, 1981

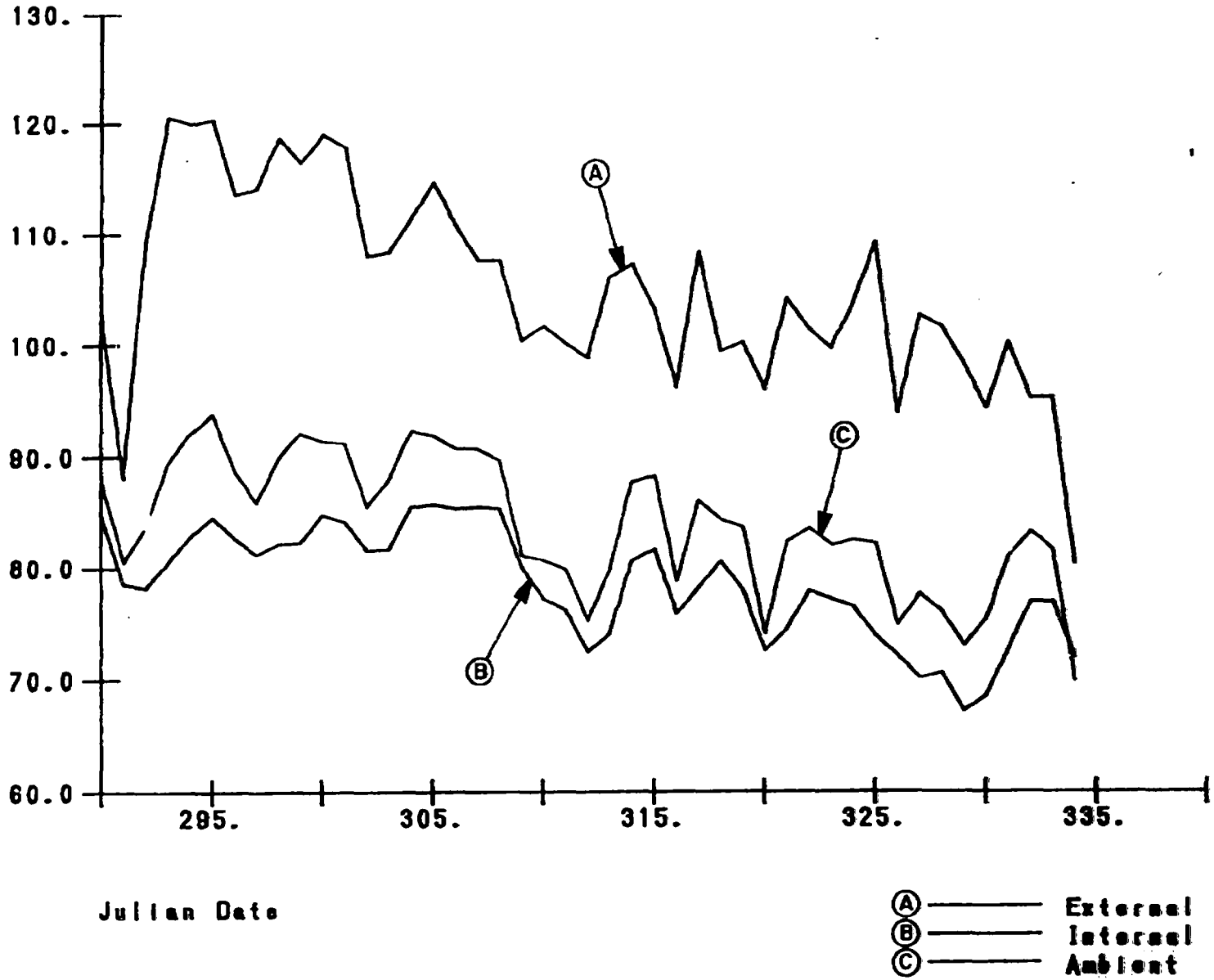

ITEM: CHG. PROP 155MM GB M3A1
DODIC: D540, LOT #: RAD-69169-73
Degrees Fahrenheit

Daily Peak Environmental Data From Campbell Logger #2 at TSA 5
Date: July 18 - September 1, 1981

ITEM: PROJ. 155MM HE RAP M549A1, COMP B
DODIC: D578, LOT #: IOP88B034-010A
Degrees Fahrenheit

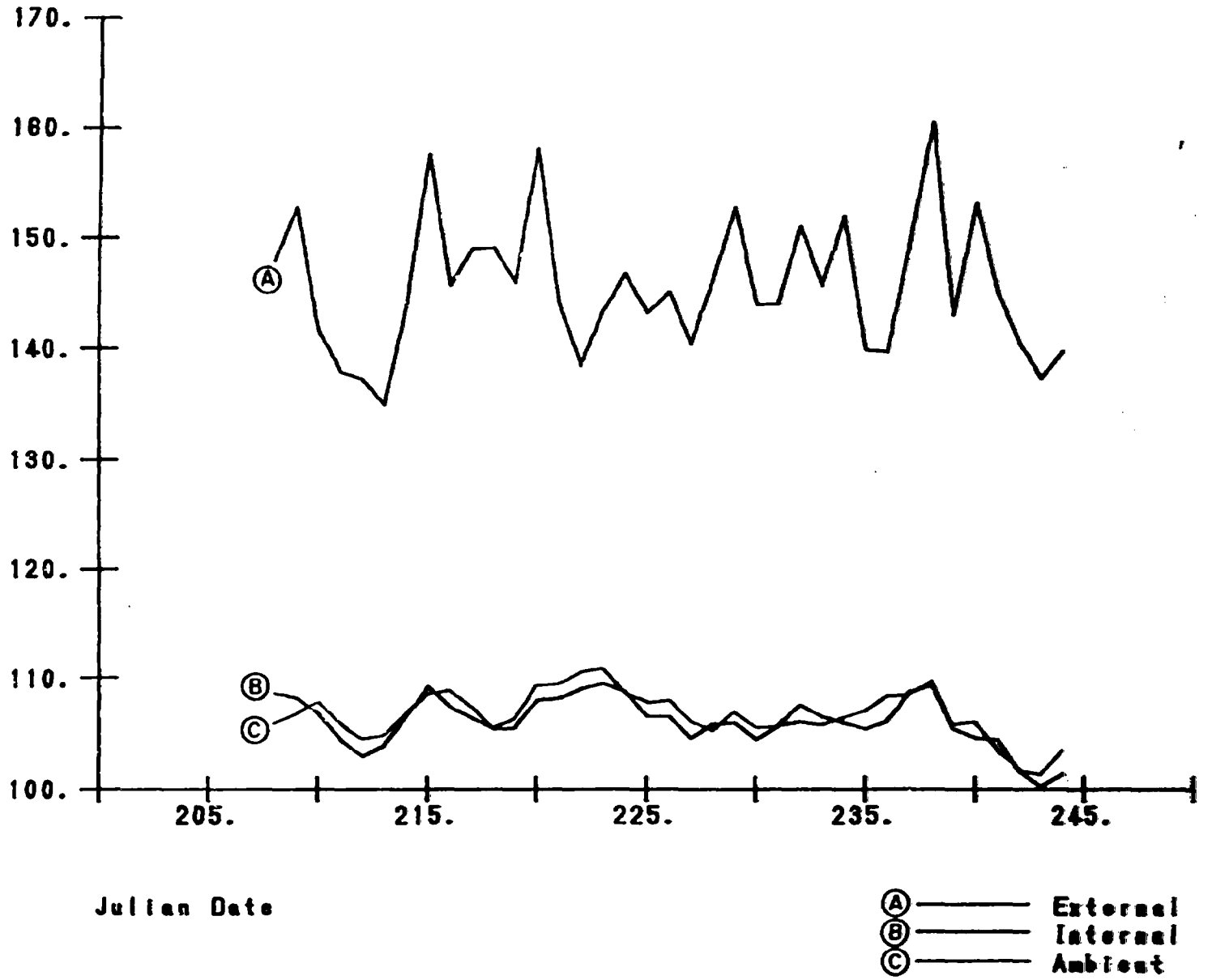

Daily Peak Environmental Data From Campbell Logger #2 at TSA 5
Date: September 2 - October 16, 1981

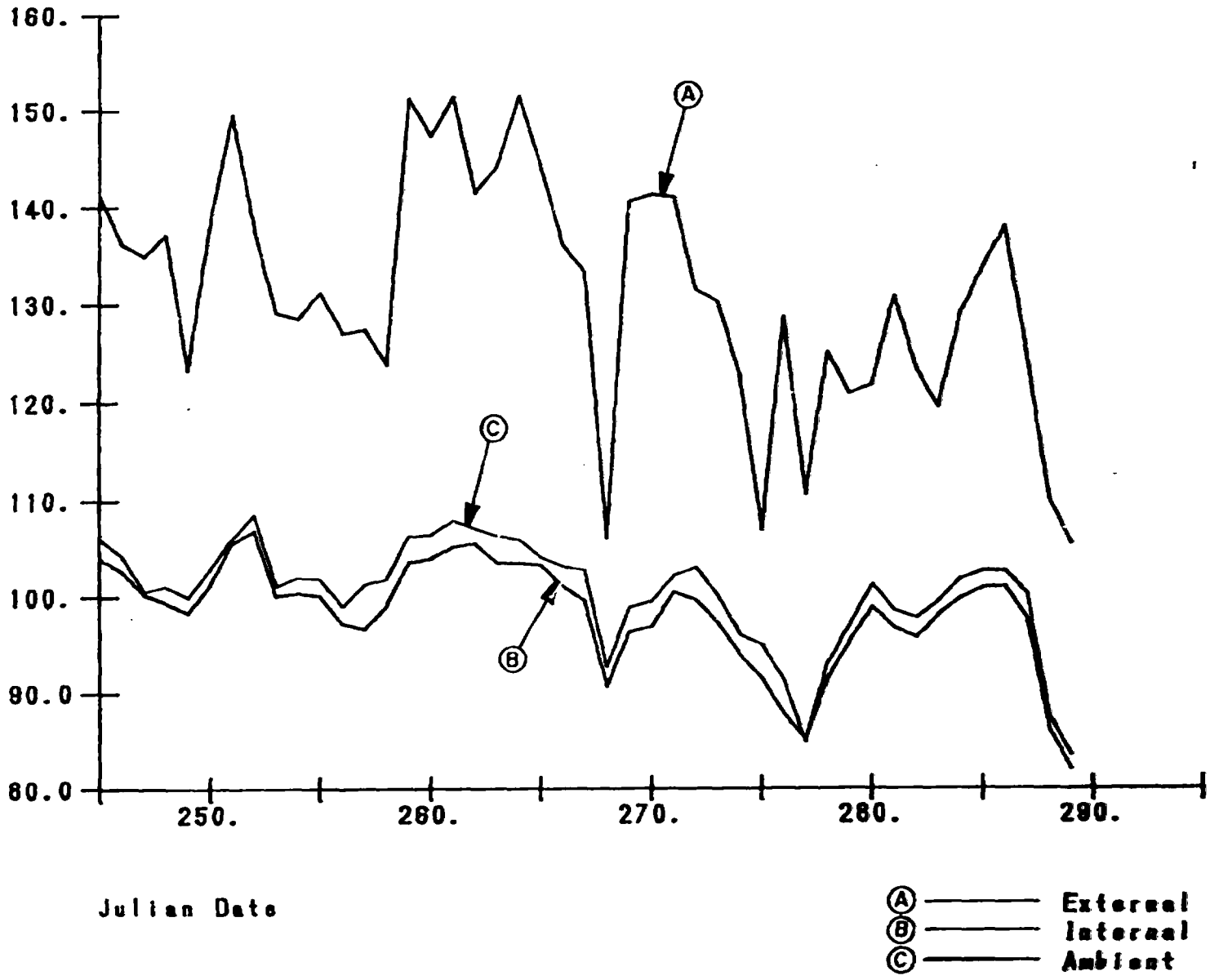

ITEM: PROJ. 155MM HE RAP M549A1, COMP B
DODIC: D579, LOT #: IOP88B034-010A
Degrees Fahrenheit

Daily Peak Environmental Data From Campbell Logger #2 at TSA 5
Date: October 17 - November 30, 1991

ITEM: PROJ. 155MM HE RAP M549A1, COMP B
DODIC: D579, LOT #: IOP86B034-010A
Degrees Fahrenheit

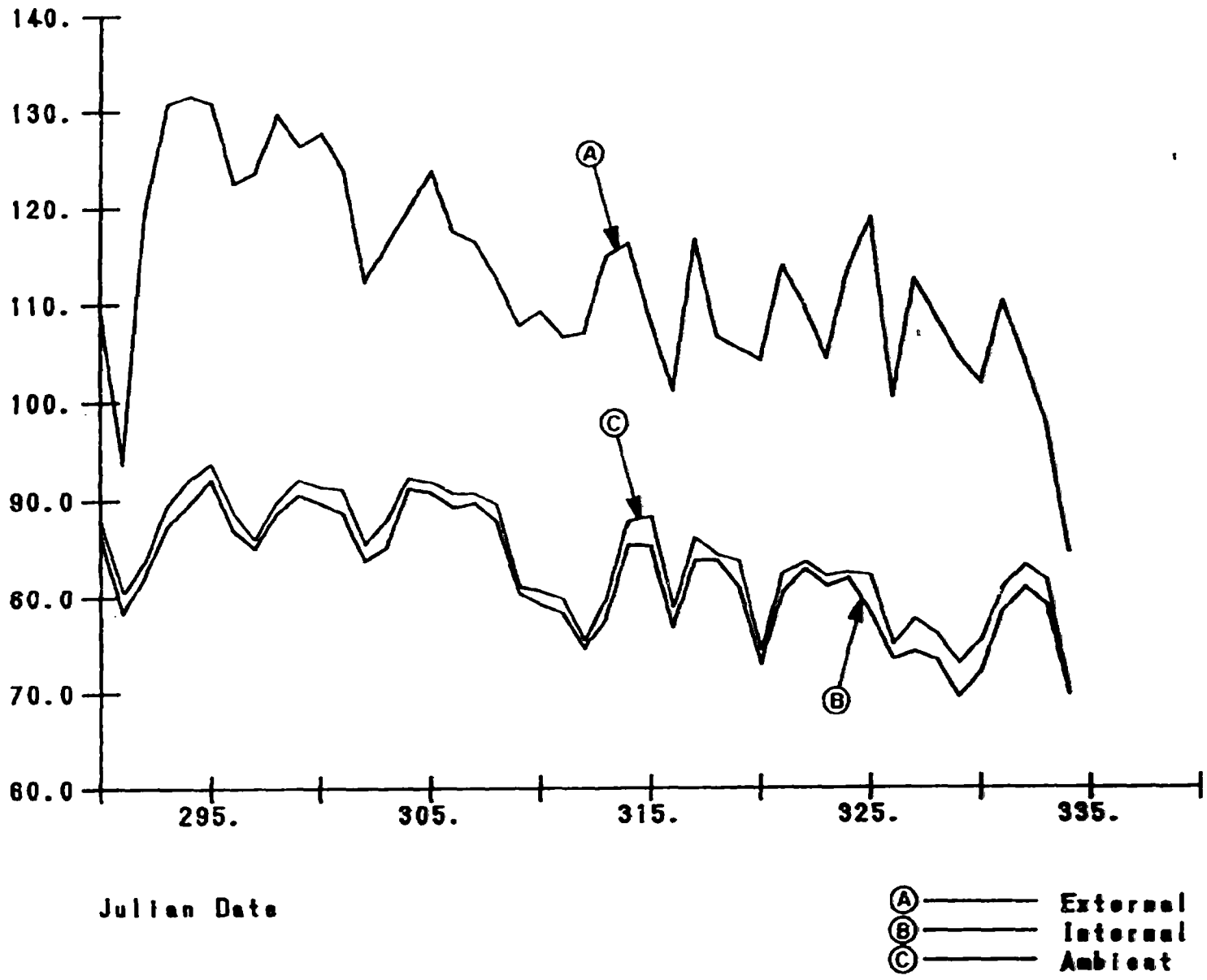

Daily Peak Environmental Data From Campbell Logger #2 at TSA 5
Date: July 18 - September 1, 1991

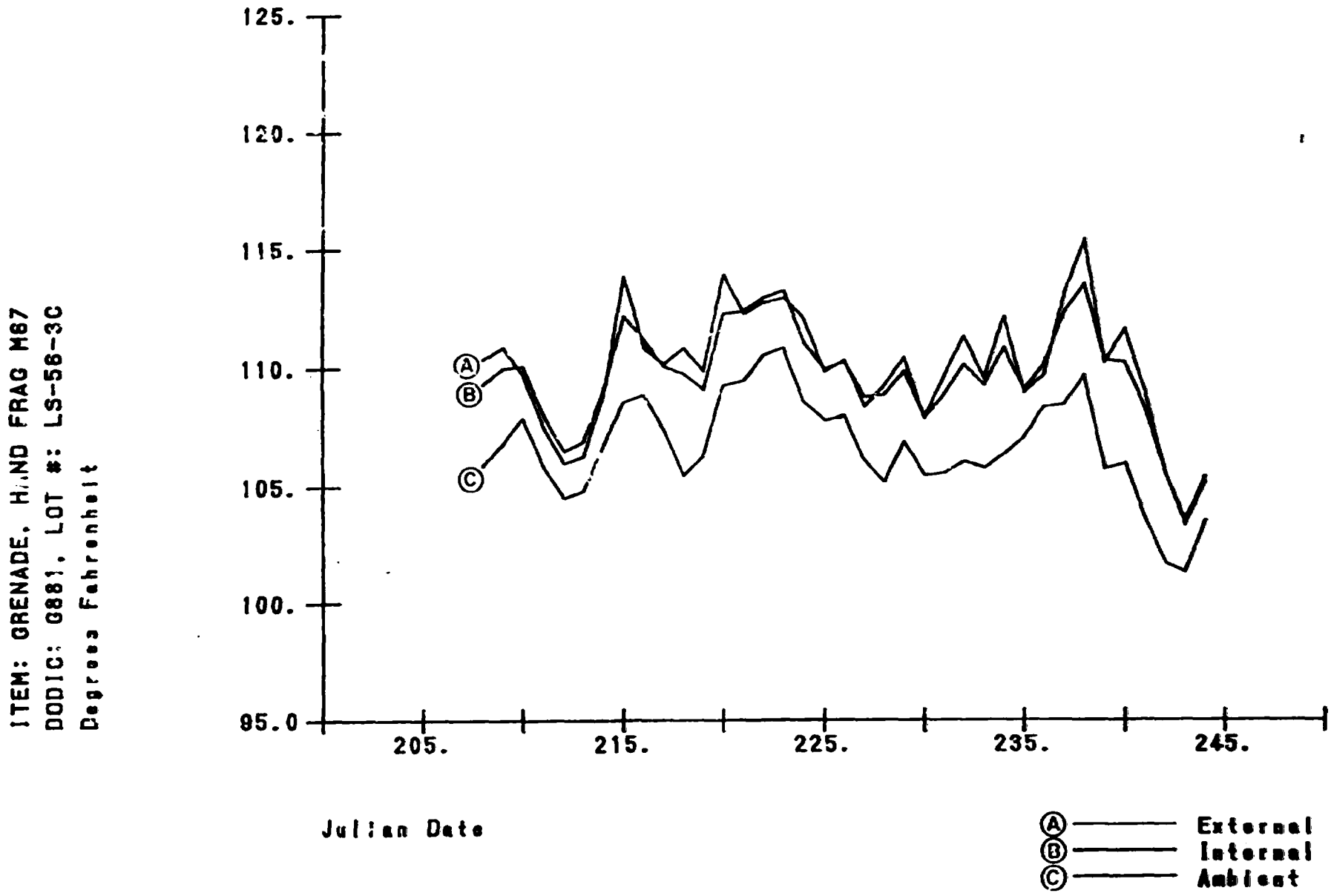

Daily Peak Environmental Data From Campbell Logger #2 at TSA 5
Date: September 2 - October 16, 1981

ITEM: GRENADE, HAND FRAG M67
DODIC: G881, LOT #: LS-58-3C
Degrees Fahrenheit

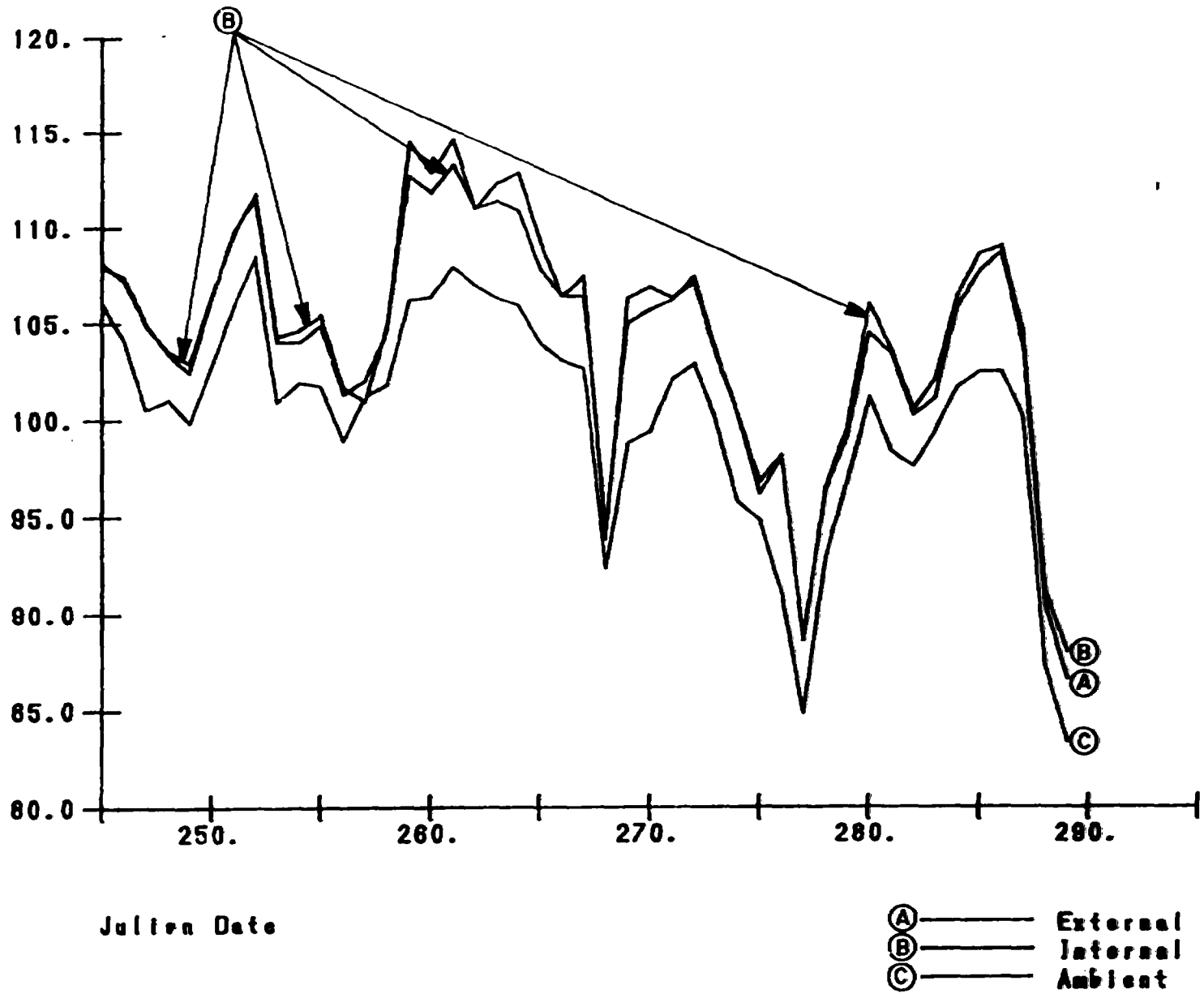

Daily Peak Environmental Data From Campbell Logger #2 at TSA 5
Date: October 17 - November 30, 1991

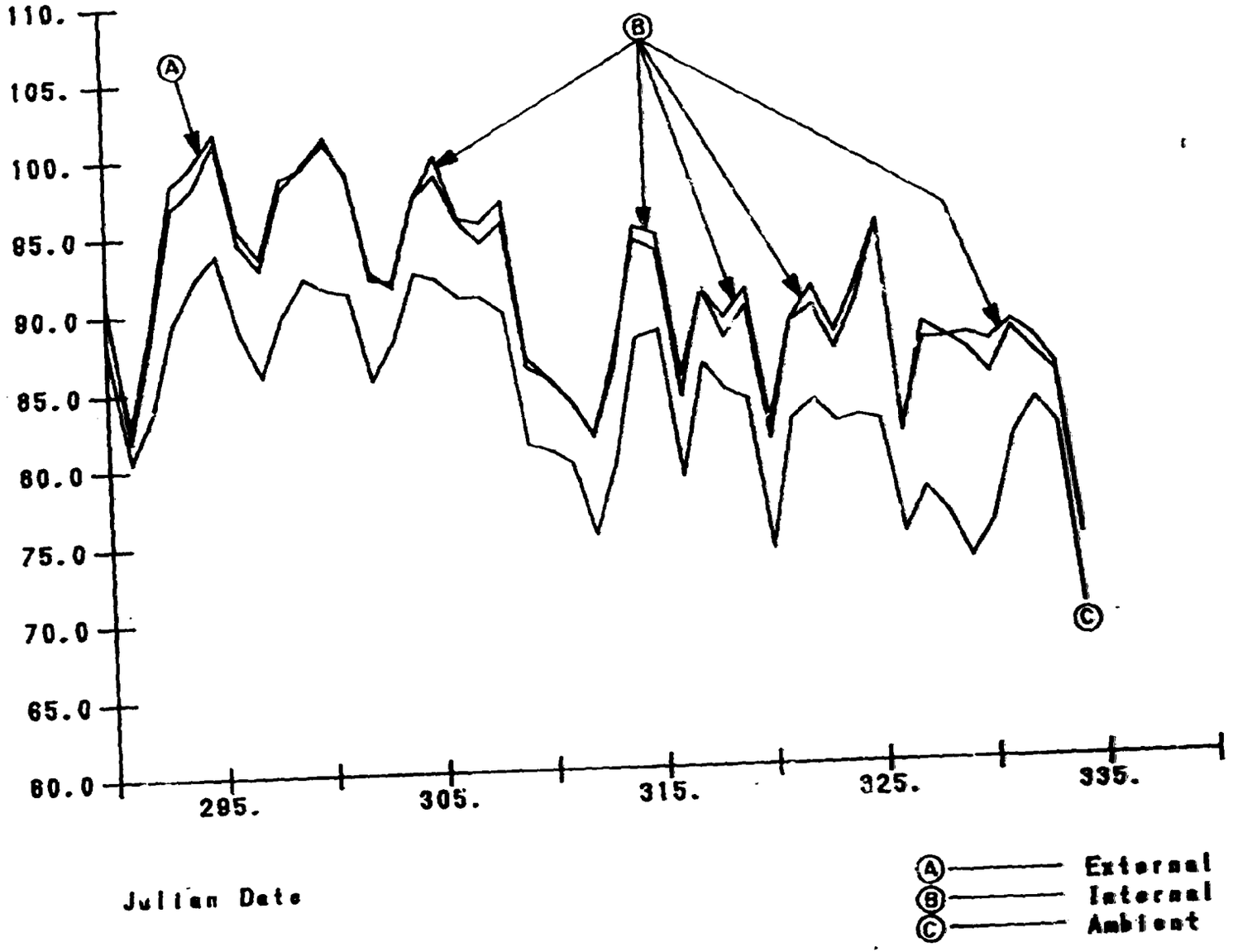

ITEM: GRENADE, HAND FRAG M67
DODIC: G881, LOT #: LS-56-3C
Degrees Fahrenheit

Daily Peak Environmental Data From Campbell Logger #2 at TSA 5
Date: July 19 - September 1, 1981

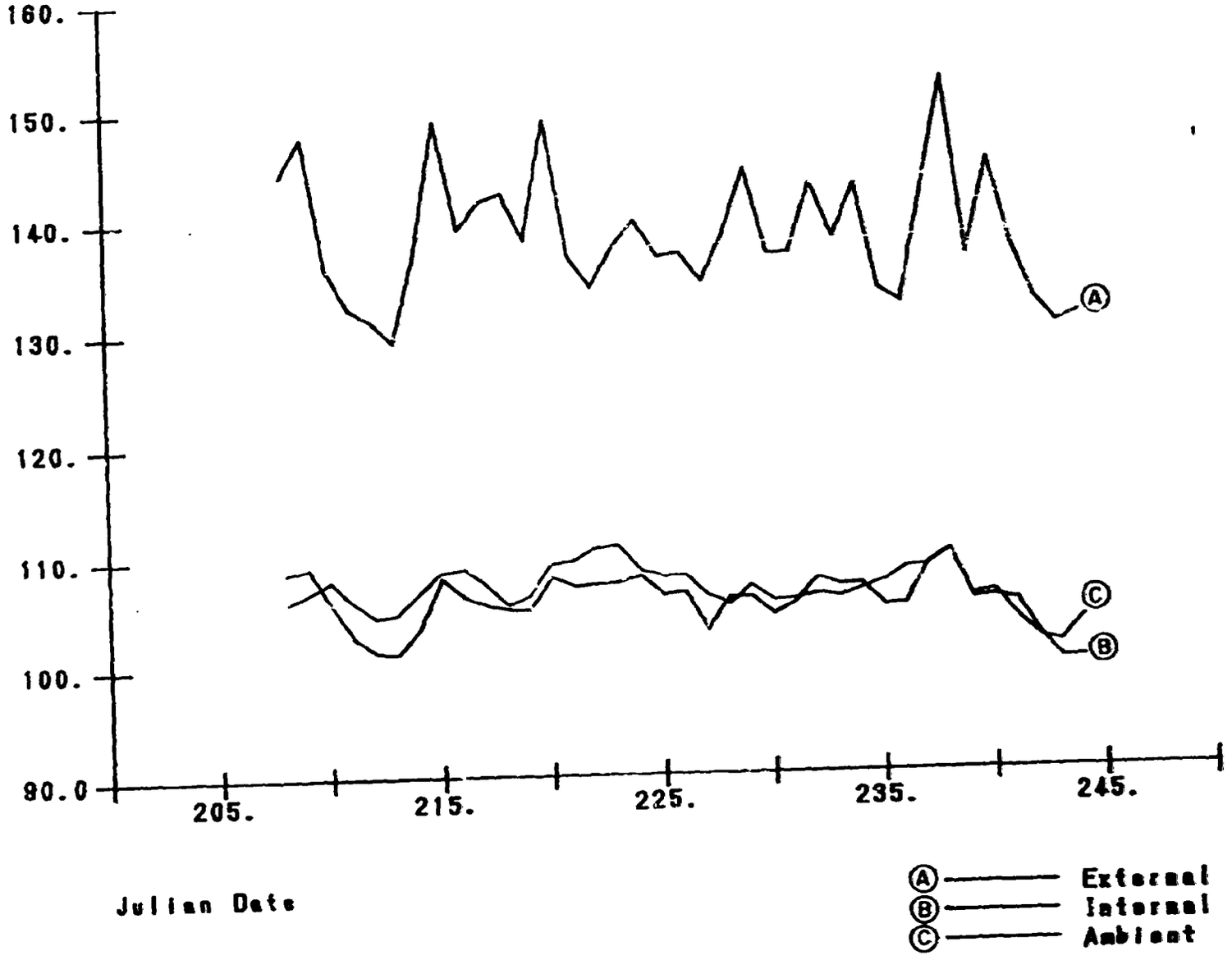

ITEM: MINE, AT HEAVY M75 (GEMSS)
DODIC: K184, LOT #: 10P90D007-003
Degrees Fahrenheit

Daily Peak Environmental Data From Campbell Logger #2 at TSA 5
Date: September 2 - October 16, 1991

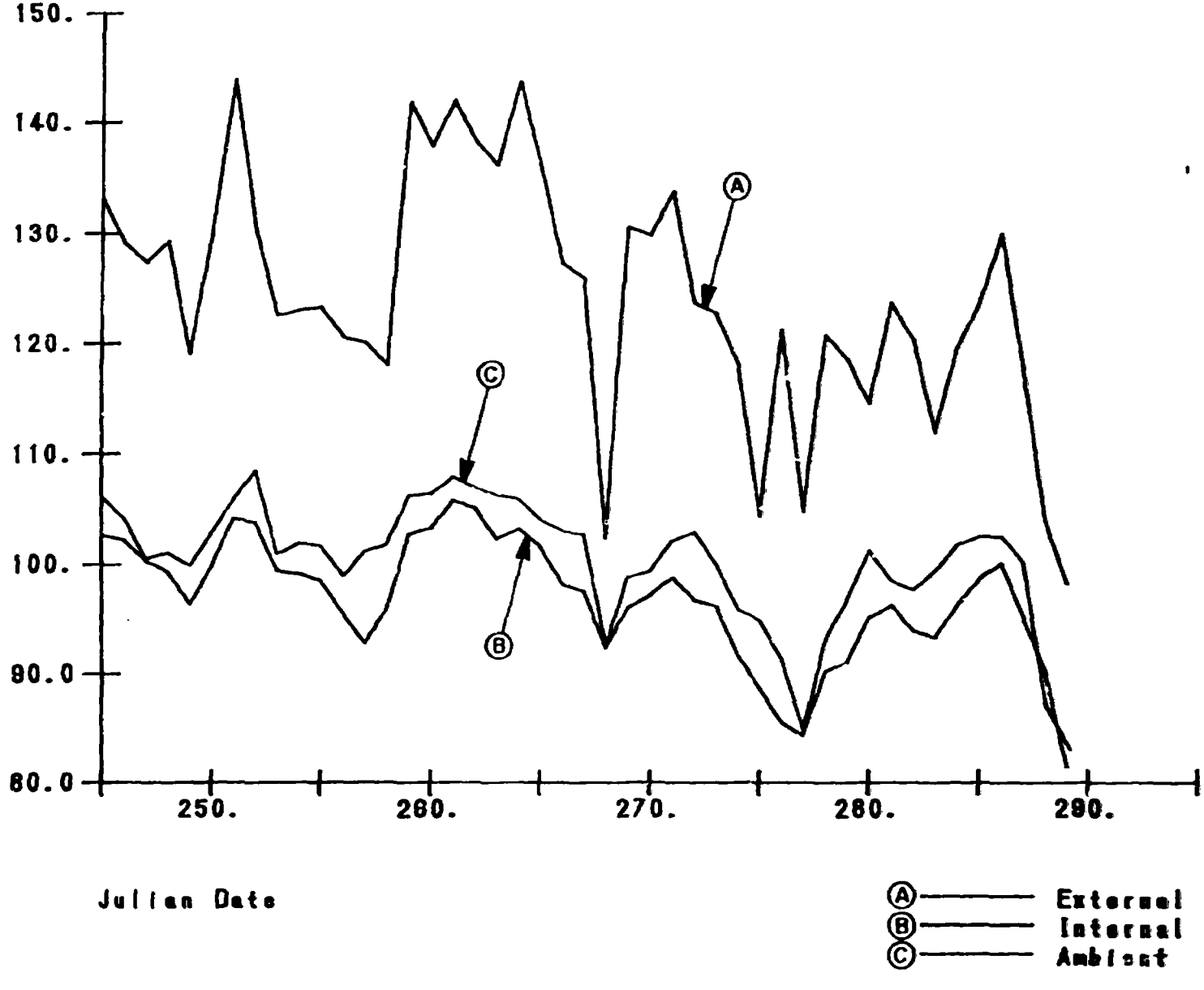

ITEM: MINE, AT HEAVY M75 (GEMSS)
DODIC: K184, LOT #: IOP90D007-003
Degrees Fahrenheit

Daily Peak Environmental Data From Campbell Logger #2 at TSA 5
Date: October 17 - November 30, 1981

ITEM: MINE, AT HEAVY M75 (GEMSS)
DODIC: K184, LOT #: IOP80D007-003
Degrees Fahrenheit

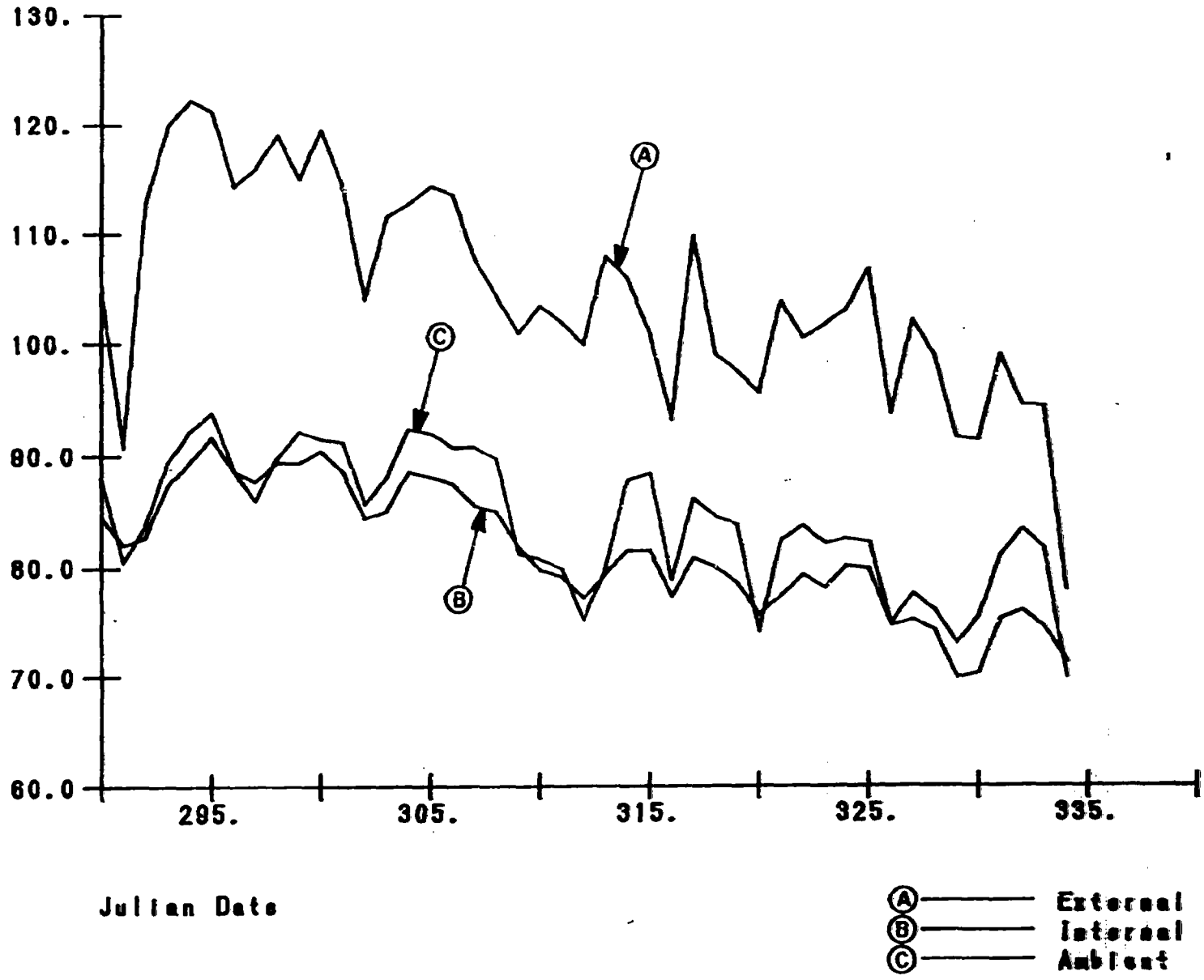

Daily Peak Environmental Data From Campbell Logger #2 at TSA 5
Date: July 19 - September 1, 1991

ITEM: FUZE, PROX M732 NON-PROP PKG
DODIC: N484, LOT #: LS-84B013-007
Degrees Fahrenheit

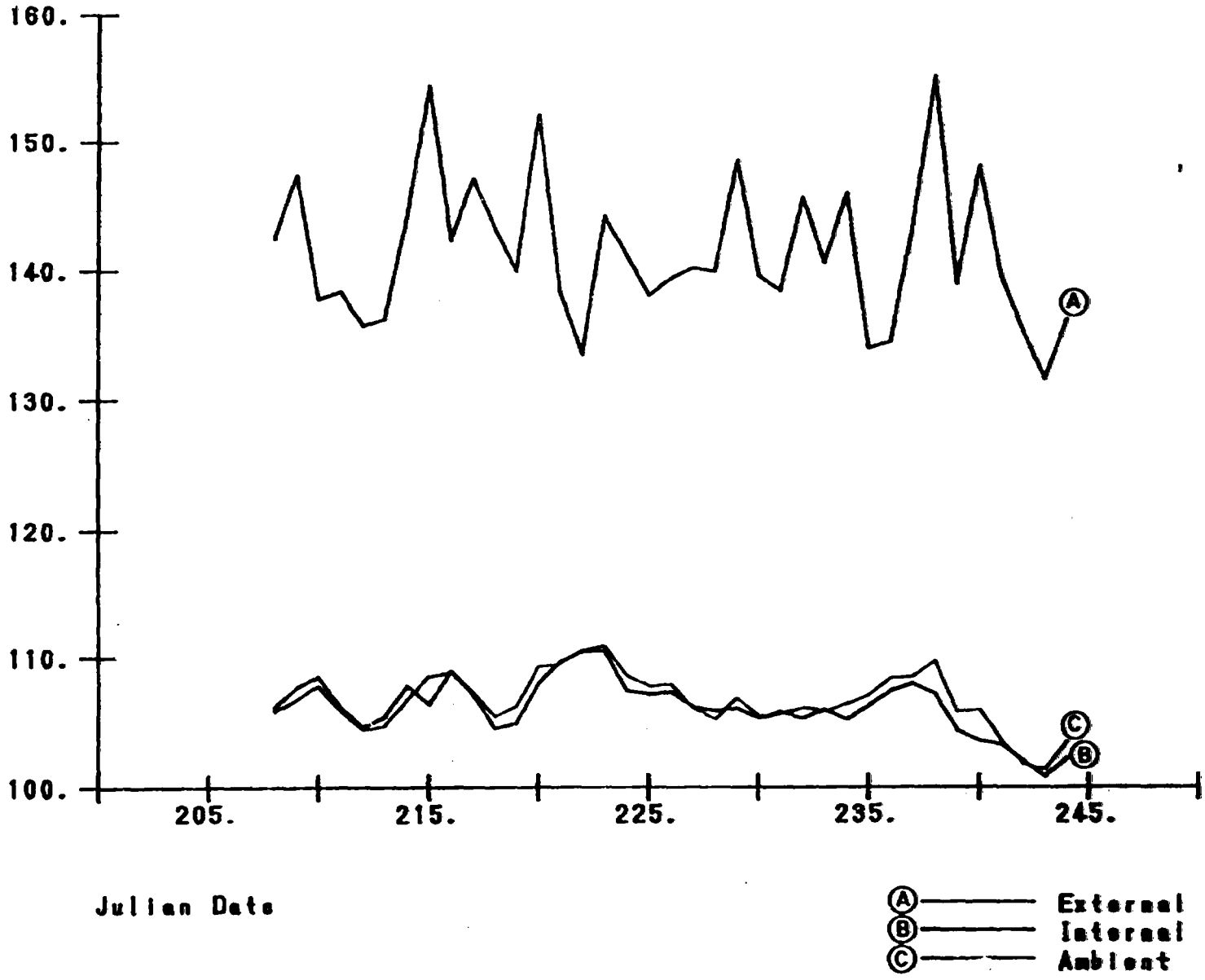

Daily Peak Environmental Data From Campbell Logger #2 at TSA 5
Date: September 2 - October 16, 1991

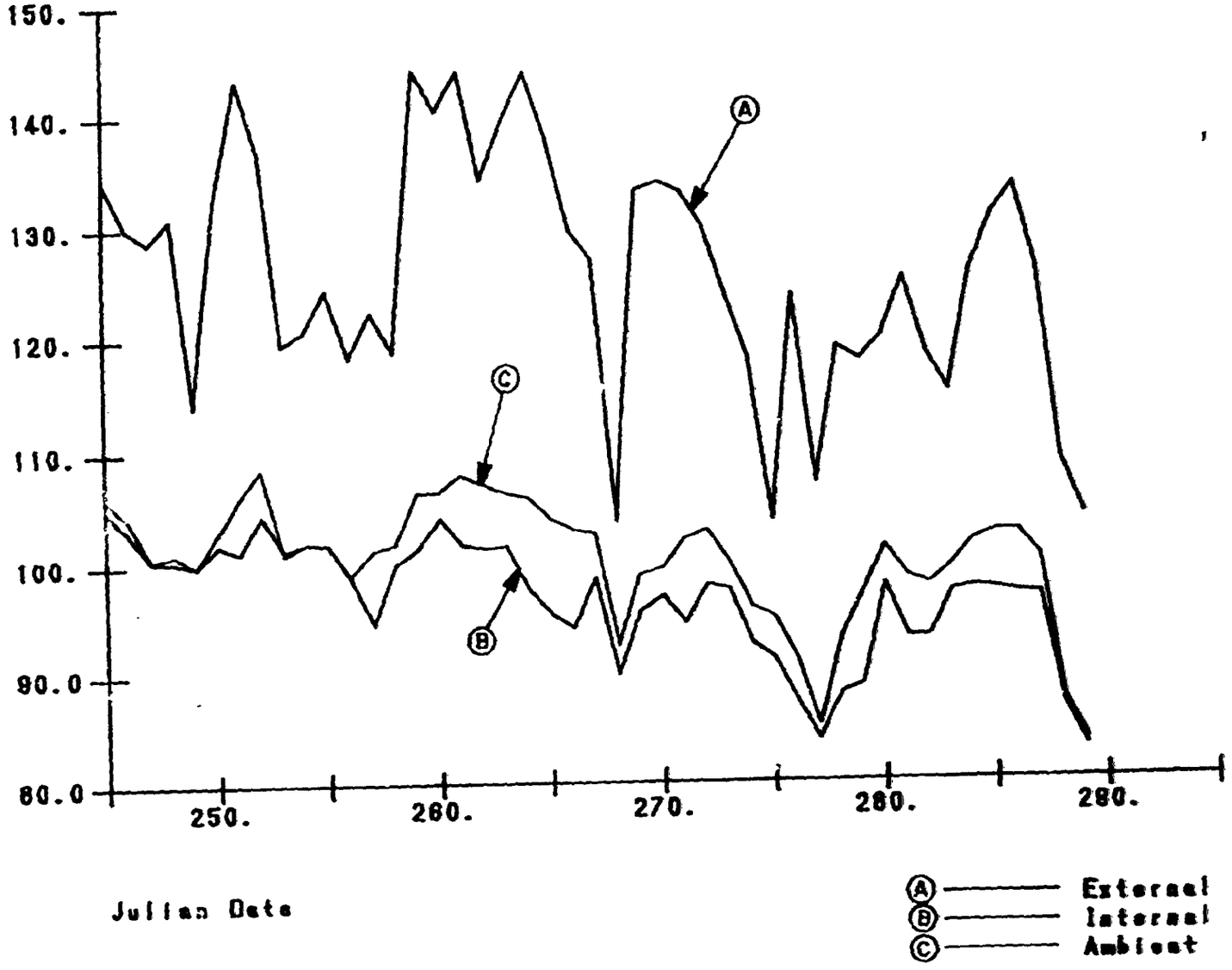

ITEM: FUZE, PROX M732 NON-PROP PKG
DODIC: N484, LOT #: LS-84B013-007
Degrees Fahrenheit

Daily Peak Environmental Data From Campbell Logger #2 at TSA 5
Date: October 17 - November 30, 1981

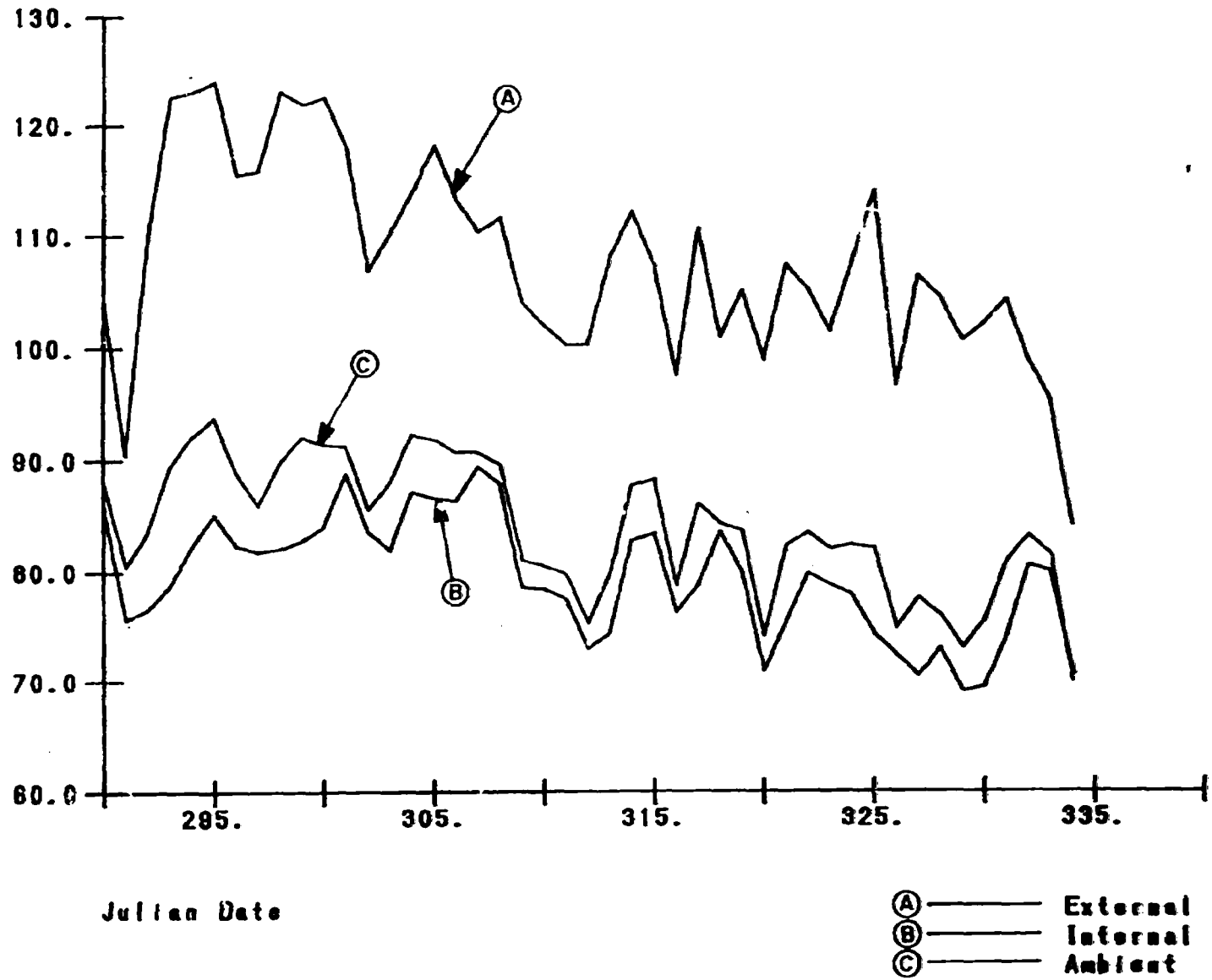

ITEM: FUZE, PROX M732 NON-PROP PKG
DODIC: N484, LOT #: LS-84B013-007
Degrees Fahrenheit

Daily Peak Environmental Data From Campbell Logger #3 at TSA 4
Date: October 17 - November 30, 1991

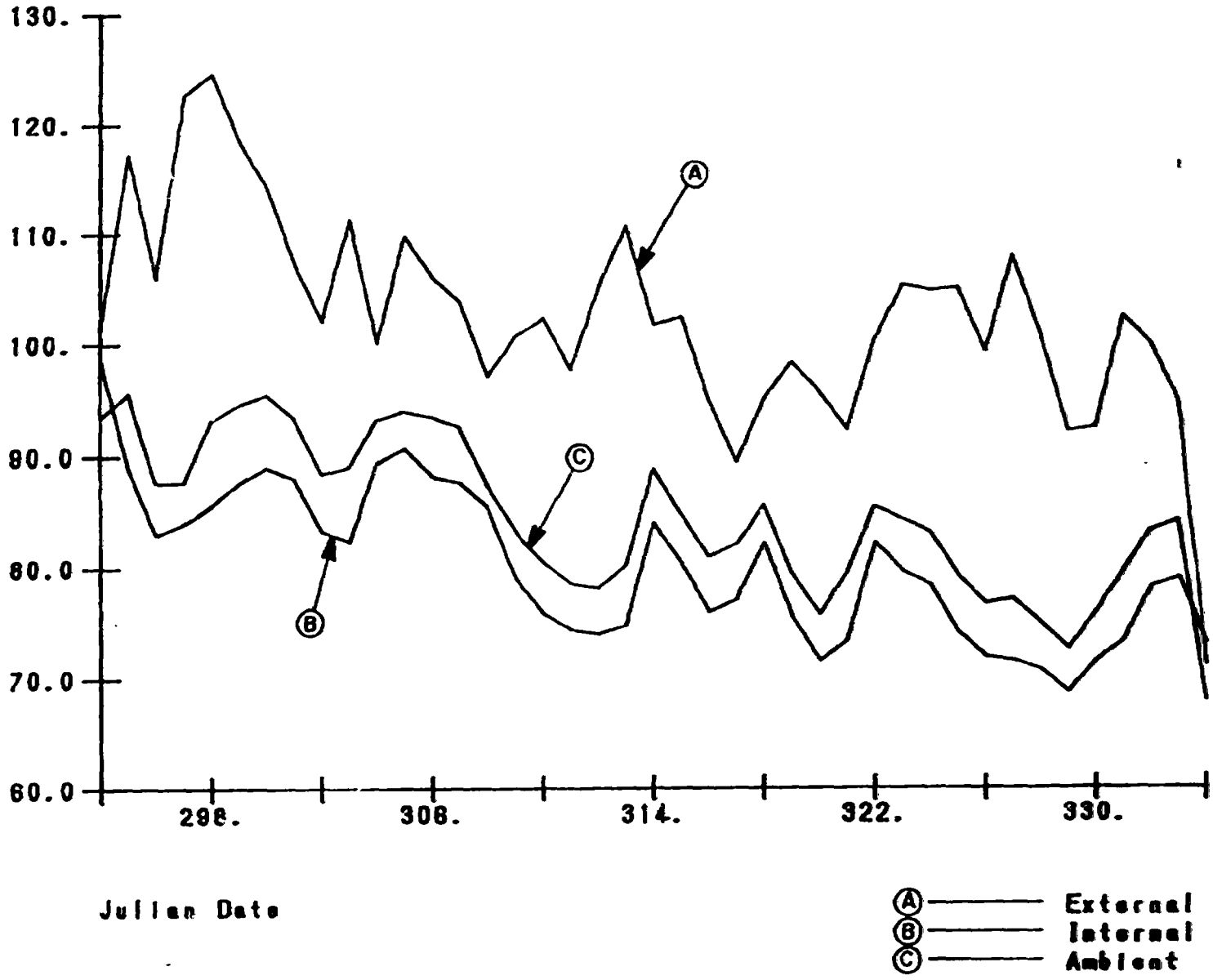

ITEM: CTG, 80MM SMK WP M302A1
DODIC: B830, LOT #: PB-3-2
Degrees Fahrenheit

Daily Peak Environmental Data From Campbell Logger #3 at TSA 4
Date: October 17 - November 30, 1991

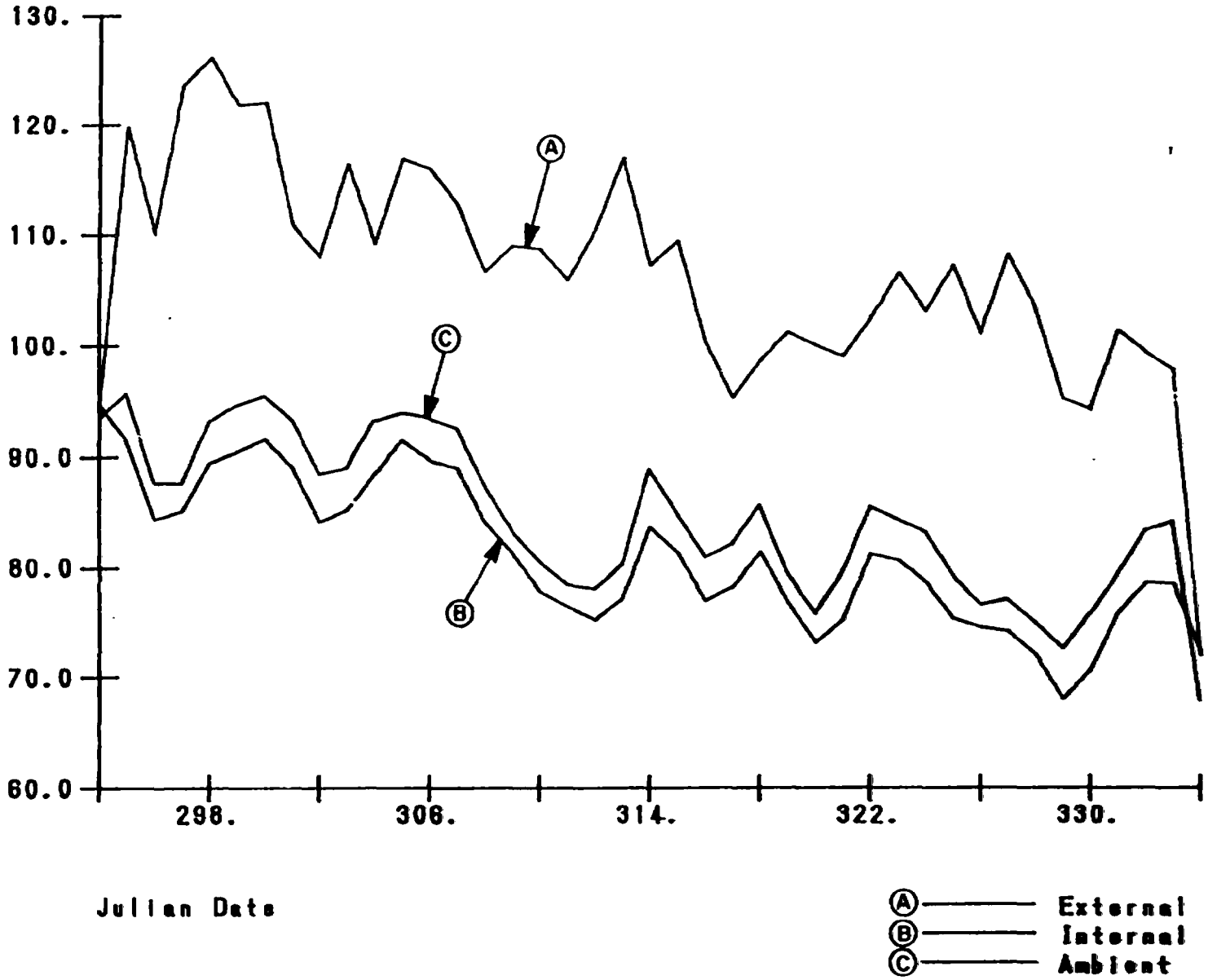

ITEM: CTG, 105MM HEAT-T M456A2
DODIC: C508, LOT #: MA-87J145-008
Degrees Fahrenheit

Daily Peak Environmental Data From Campbell Logger #3 at TSA 4
Date: October 17 - November 30, 1991

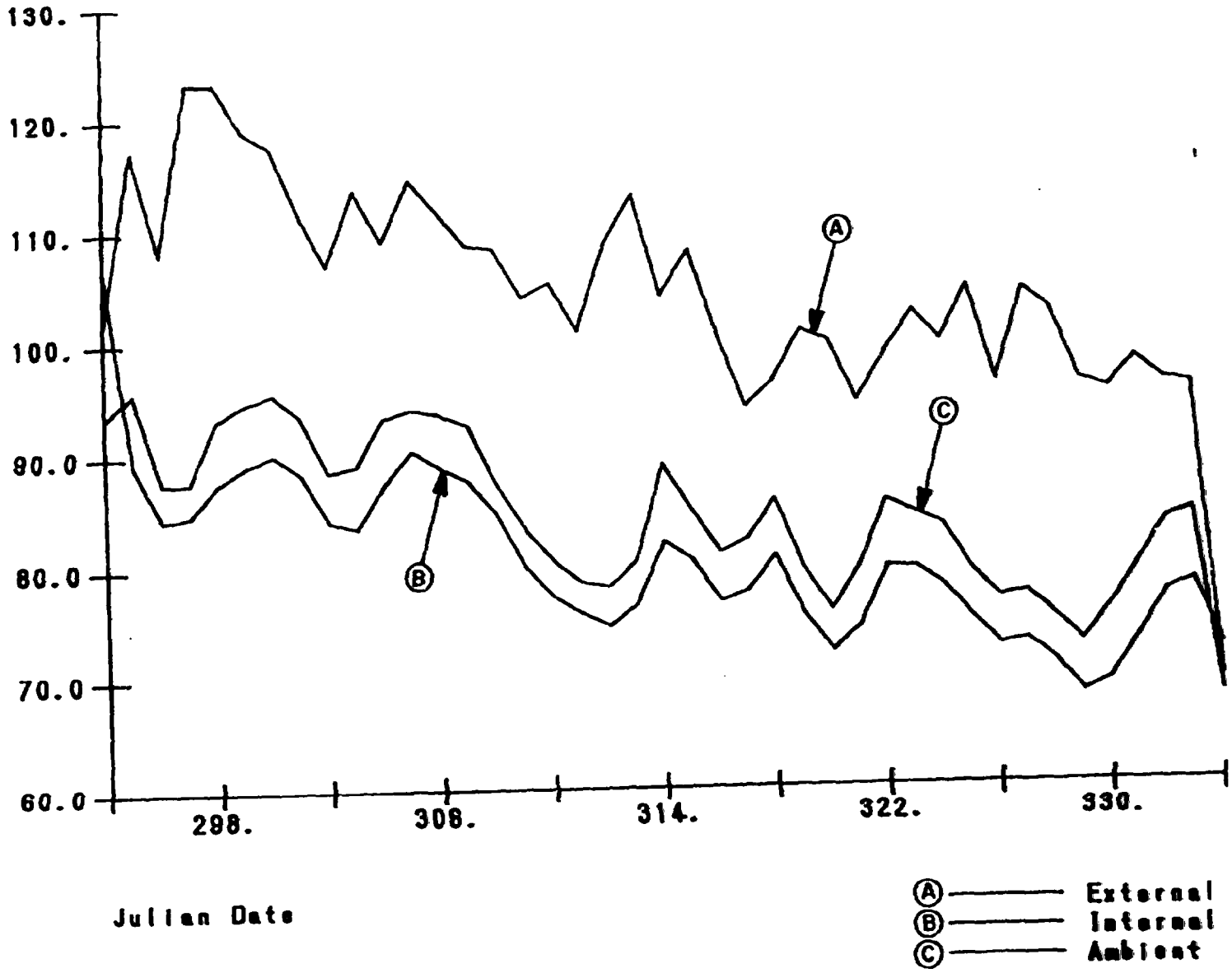

ITEM: CTG, 4.2IN HE M329A1 W/O FUZE
DODIC: C705, LOT #: IOP-7-198
Degrees Fahrenheit

Daily Peak Environmental Data From Campbell Logger #3 at TSA 4
Date: October 17 - November 30, 1991

ITEM: CTG, 120MM APFSDS-T M829
DODIC: C786, LOT #: MHM89C060-002
Degrees Fahrenheit

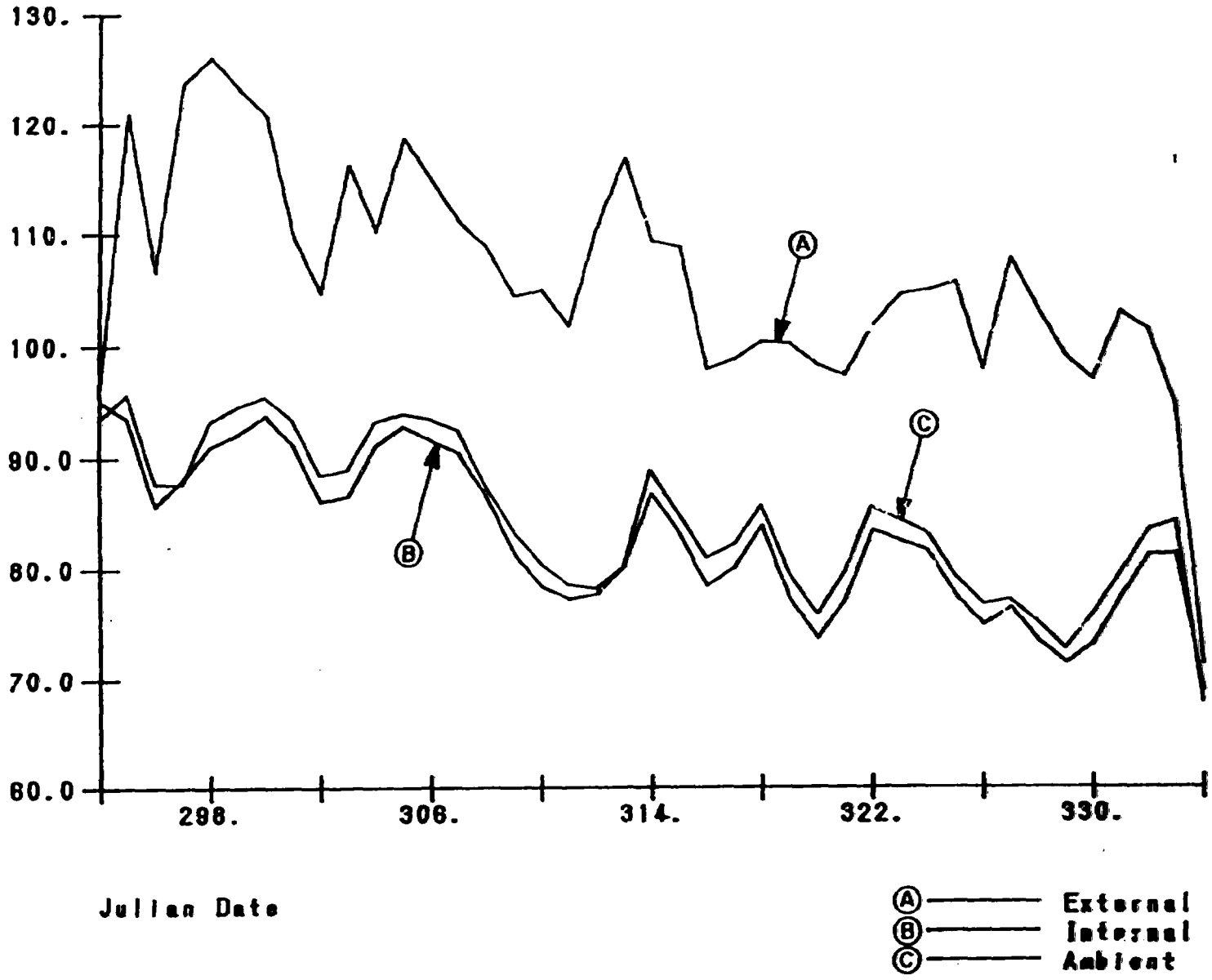

Daily Peak Environmental Data From Campbell Logger #3 at TSA 4
Date: October 17 - November 30, 1991

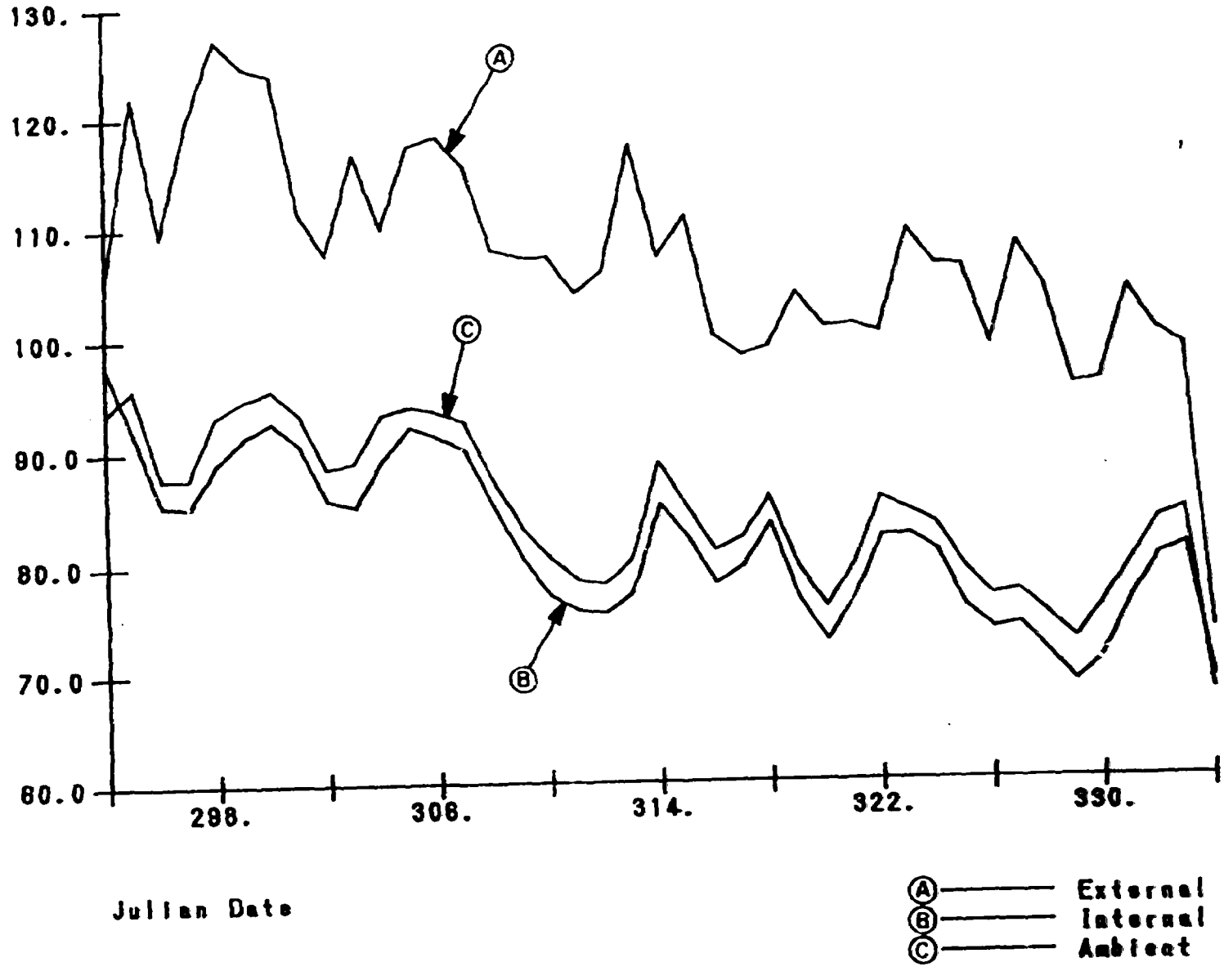

ITEM: CHG. PROP 155MM RB M203
DODIC: D532, LOT #: IND90D-071280
Degrees Fahrenheit

Daily Peak Environmental Data From Campbell Logger #3 at TSA 4
Date: October 17 - November 30, 1991

ITEM: PROJ. 155MM HE RAP M549A1 (COMP B)
DODIC: D579, LOT #: IOP85A033-008A
Degrees Fahrenheit

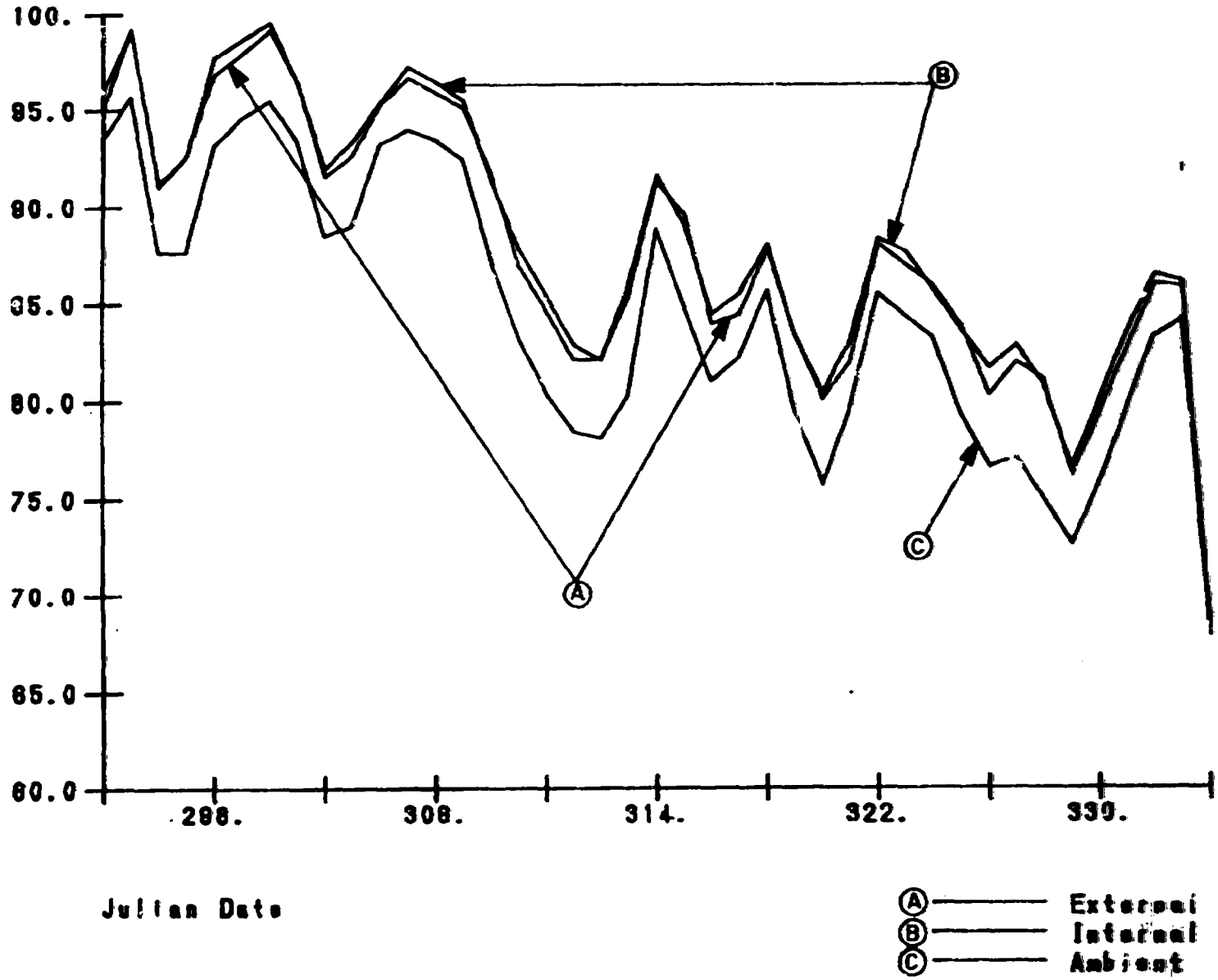

Daily Peak Environmental Data From Campbell Logger #3 at TSA 4
Date: October 17 - November 30, 1991

ITEM: FUZE, MTSQ M577/wM577A1 W/O BOOSTE
DODIC: N285, LOT #: HAT84J014-004
Degrees Fahrenheit